Notice of Determination Report (Dandenong Valley Zone Substation Secondary Assets Condition)

Project No. UE-RCA-S-24-001

united energy

Disclaimer
The master document is controlled electronically.
Ensure latest version prior to use.

Based on document template: UE-TP-2202.1 Project Assessment Report Template Revision 221216
Document controlled in accordance with ST-1750 INMS Document Management Standard

Document Control

Version	Amendment Overview
1	Initial Version

Table of Contents

1. Executive Summary 4

1.1 Summary 4
1.2 Purpose 4
1.3 The Identified Need 4
1.4 Next Steps 4

2. Introduction 5

3. Referenced Documents 5

4. Definitions 6

5. Identified Need 7

5.1 Network Overview 7
5.2 Description of the Identified Need 8
5.2.1 RTU Condition 9
5.2.2 Protection and Control Equipment Condition 9
5.3 Quantification of the Identified Need 9

6. Key Assumptions in Relation to the Identified Need 10

6.1 Method for Quantifying the Identified Need 10
6.1.1 Safety 10
6.1.2 Reliability 10
6.2 Forecast Maximum Demand 10
6.3 Forecast Annual Energy 10
6.4 Characteristic of Load Profile 11
6.5 Load Transfer Capacity and Supply Restoration Times 13
6.6 Discount Rates 13
6.7 Asset Ratings 13
6.8 Value of Customer Reliability 13
6.9 Potential Credible Options to Address the Identified Need 13

7. Technical Characteristics of Non-Network Options 17

7.1 Size of Support 17
7.2 Time of Year, Duration and Location of Support 17
7.3 Reliability of Support 17

8. Conclusion and Next Steps 18

8.1 Conclusion 18
8.2 Next Steps 18

Appendix A: Secondary Assets Photos 19

List of Figures

Figure 1: DVY Electrical Single Line Diagram 7
Figure 2: DVY Supply Area 8
Figure 3: Annual Load Profile at DVY 11
Figure 4: Load Profile on Day of Summer Maximum Demand at DVY 12
Figure 5: Annual Load-Duration Curve at DVY 12
Figure 6: In-Service Protection, Control & Communications Equipment at DVY 19

List of Tables

Table 1: Referenced Documents 5
Table 2: Terms and Definitions 6
Table 3: DVY Reliability and Safety Risk Quantification ($'000, Real 2024) 9
Table 4: DVY Maximum Demand Forecast 10
Table 5: DVY Annual Energy Forecast 11
Table 6: Summary of DVY Ratings (MVA) 13
Table 7: Summary of Location Specific VCR 13
Table 8: Base Case 14
Table 9: Credible Options Under Consideration 14
Table 10: Options Regarded as Being Not Credible 14
Table 11: Minimum Peak Demand and Annual Energy Offsets Required from Non-Network or SAPS Solutions 17

1. Executive Summary

1.1 Summary

United Energy (UE) is a regulated Victorian electricity distribution business. UE distributes electricity to more than 727,000 customers across Melbourne's east and south-east metropolitan area, and the Mornington Peninsula. The UE network consists of more than 215,000 poles and over 13,590 kilometres of overhead lines and underground cables. Electricity is received via 92 sub-transmission lines at 47 zone substations, where it is transformed from sub-transmission voltages down to distribution voltages.

The area of the UE network that is the subject of this Regulatory Investment Test for Distribution (RIT-D) is the Dandenong Valley Zone Substation (DVY) supply area (i.e. DVY supply area) that includes parts of the suburbs of Dandenong South, Lyndhurst, Bangholme and Carrum Downs. DVY is owned and operated by UE, providing power to approximately 4,294 customers, with a significant portion of these being industrial and commercial.

The condition of the secondary assets (protection, control, monitoring and communications equipment) at DVY, necessary for the provision of a safe and reliable power supply to customers within the DVY supply area, is deteriorating, and many are now technically obsolete, being unsupported by equipment suppliers with no spares.

UE has identified potential credible network options to address the secondary asset condition risks at DVY, and investigated whether viable non-network or stand-alone power system (SAPS) solutions exist as alternatives to, or supplements for the network options.

Based on this report, UE has concluded on reasonable grounds, that none of the potential non-network or SAPS options investigated represent technically or commercially feasible alternatives, nor could any combination of non-network or SAPS options adequately address the identified need. Therefore, UE has determined that the publication of, and the consultation on an options screening report, is not required in this instance.

1.2 Purpose

This Notice of Determination report has been prepared by UE in accordance with the requirements of clause 5.17.4, paragraphs (c) and (d) of the National Electricity Rules (NER) version 209. UE is normally required to publish an options screening report and request stakeholder submissions, as detailed in NER clause 5.17.4(e). However, in the event that there are no potential credible non-network or SAPS options (or any combination of those options with or without a network option) that could address the identified need, UE is instead required to publish a Notice of Determination.

1.3 The Identified Need

The condition of the secondary assets at DVY is deteriorating. In particular,

- The condition of the remote terminal unit (RTU) for provision of supervisory control and data acquisition (SCADA) telemetry services at DVY is poor, being at risk of failure and is technically obsolete. The communication protocol it uses for communication with protection and control relays within the zone substation is legacy and reliant upon proprietary protocol conversion hardware. The RTU equipment is no longer supported by the vendor and has had a history of failures and operational issues.
- Most of the protection and control relays at DVY are now technically obsolete, being no longer supported by vendor, and no spare parts.

Therefore, the identified need is to manage the increasing risk of asset failure to maintain safety and reliability of electricity supply to UE's customers and workforce within the DVY supply area.

1.4 Next Steps

UE is not required to publish and consult on an options screening report in this instance, because it has been determined on reasonable grounds, that there will not be a potential credible non-network or SAPS option that is able to address the identified need, nor any that forms a significant part of a potential credible option.

Furthermore, the total cost of the most expensive credible network option to address the identified need, is less than the trigger threshold of $12 million[1] for the publication of and consultation on a Draft Project Assessment Report (DPAR).

[1] https://www.aer.gov.au/networks-pipelines/guidelines-schemes-models-reviews/cost-thresholds-review-for-the-regulatory-investment-tests-2021

On this basis, UE shall now prepare and publish a Final Project Assessment Report (FPAR), as required under NER clause 5.17.4, paragraphs (o) to (s). UE intends to publish the FPAR by 31st May 2024.

For the purposes of referencing this RIT-D, this RIT-D is referred to as the "*Dandenong Valley Zone Substation Secondary Assets Condition*" identified need.

2. Introduction

This Notice of Determination report has been prepared by United Energy (UE) in accordance with the requirements of clause 5.17.4, paragraphs (c) and (d) of the National Electricity Rules (NER) version 209, for the Dandenong Valley Zone Substation Secondary Assets Condition identified need.

UE is not required to publish and consult on an options screening report in this instance, because it has been determined (on reasonable grounds) that there will not be a potential credible non-network or SAPS option that is able to address the identified need, nor any that forms a significant part of a potential credible option.

This report sets out the reasons for this determination, including the methods and assumptions used in making the determination.

The need for investment and the possible options for addressing the Dandenong Valley Zone Substation Secondary Assets Condition identified need, have been foreshadowed in UE's 2023 Distribution Annual Planning Report (DAPR).[2]

This Notice of Determination report:

- Provides background information on the network limitations at Dandenong Valley Zone Substation (DVY), and for the DVY supply area for which it services.
- Identifies the need which UE is seeking to address, together with the assumptions used in identifying that need.
- Describes the credible options that UE currently considers may address the identified need, including for each:
  - Technical definitions;
  - The risk costs associated with the option for addressing the identified need;
  - The estimated commissioning date; and
  - The total indicative cost (including capital and operating costs), with high-level cost breakdown.
- Sets out the technical characteristics that a non-network or stand-alone power system (SAPS) option would be required to deliver in order to address the identified need.

3. Referenced Documents

Table 1: Referenced Documents

Title	Document No.
UE Embedded Generation Network Access Standards	UE-ST-2008.X
UE Asset Risk Quantification Guide	UE-GU-2011

[2] UE: Distribution Annual Planning Report. Available at: https://dapr.unitedenergy.com.au/ue_data/UE-PL-2209%20Distribution%20Annual%20Planning%20Report%20DAPR%20-%202023.pdf

4. Definitions

Table 2: Terms and Definitions

Term	Definition
A.C.	Alternating Current
AEMO	Australian Energy Market Operator
AFAP	As Far As Practicable
CPU	Central Processing Unit
DAPR	Distribution Annual Planning Report
D.C.	Direct Current
DN	Dandenong Zone Substation
DPAR	Draft Project Assessment Report
DSED	Demand Side Engagement Document
DSH	Dandenong South Zone Substation
DVY	Dandenong Valley Zone Substation
EUE	Expected Unserved Energy (MWh pa)
FPAR	Final Project Assessment Report
MWp	Megawatt peak
NCC	Network Control Centre
NEM	National Electricity Market
NER	National Electricity Rules
PoE	Probability of Exceedance
RIT-D	Regulatory Investment Test for Distribution
RTU	Remote Terminal Unit
SAPS	Standalone Power System
SCADA	Supervisory Control and Data Acquisition
UE	United Energy
VCR	Value of Customer Reliability ($/MWh)
50% PoE	The forecast maximum demand has a 50% probability of exceedance (PoE). That is, the forecast maximum demand is expected, on average, to be exceeded once in two years.
10% PoE	The forecast maximum demand has a 10% probability of exceedance (PoE). That is, the forecast maximum demand is expected, on average, to be exceeded once in ten years.
Credible option	An option that addresses the ‘identified need’, is commercially and technically feasible, and can be implemented in sufficient time to meet the ‘identified need’.
Identified need	Any capacity, voltage, or safety limitation on the distribution system.
Limitation	Any limitations on the operation of the distribution system that will give rise to Expected Unserved Energy or safety risk consequences.
Network option	A means by which an ‘identified need’ can be fully or partly addressed by expenditure on distribution network assets.
Non-network or SAPS option	A means by which an ‘identified need’ can be fully or partially addressed other than by a network option.

Term	Definition
Non-network service provider	A party who provides a non-network or SAPS option.
Potential credible option	An option has the potential to be a credible option based on an initial assessment of its ability to address the 'identified need'.
Preferred network option	A credible network option that maximises the present value of net economic benefit to all those who produce, consume and transport electricity in the NEM. The preferred network option can be a network option, or do nothing (i.e. status quo).
Preferred option	A credible option that maximises the present value of net economic benefit to all those who produce, consume and transport electricity in the NEM. The preferred option can be a network option, non-network or SAPS option, combination of both, or do nothing (status quo).

5. Identified Need

5.1 Network Overview

The area of UE's distribution network that is the subject of this Regulatory Investment Test for Distribution (RIT-D), is the Dandenong Valley Zone Substation (DVY) supply area, that includes parts of the suburbs of Dandenong South, Lyndhurst, Bangholme and Carrum Downs in Melbourne's outer south-eastern suburbs.

DVY is owned and operated by UE, providing power to approximately 4,294 customers, with the majority of the load at DVY comprising of industrial and commercial customers, predominantly located within the northern side of the DVY supply area, but also growing southward.

DVY is a 66/22 kV zone substation, with three 20/33 MVA transformers, servicing its supply area with 12 x 22 kV distribution feeders.

DVY is bounded mainly in the north by adjacent 22 kV zone substations DN (Dandenong) and DSH (Dandenong South) providing transfer capacity to be able to reduce load on the zone substation in the event of an emergency (such as a major asset failure, for example). The load transfer capability away from DVY is 15.4 MVA.

The rating of DVY with all transformers in service is 131.1 MVA, and with one transformer out of service the rating reduces to 87.4 MVA. This compares to a forecast 10% PoE maximum demand of 91.7 MVA for summer 2024/25, rising to 98.3 MVA by 2027/28.

The electrical single line diagram for DVY, showing the 66 kV assets, 66/22 kV transformers, and 22 kV assets (including distribution feeder exits) is illustrated in Figure 1.

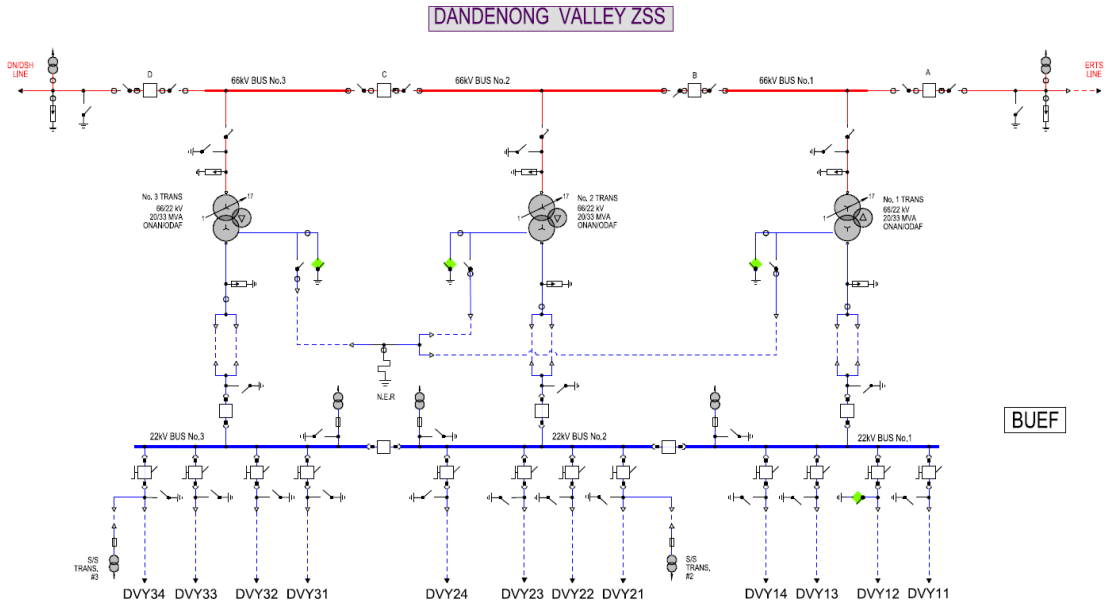

Figure 1: DVY Electrical Single Line Diagram

The power supply coverage of DVY is illustrated in Figure 2.

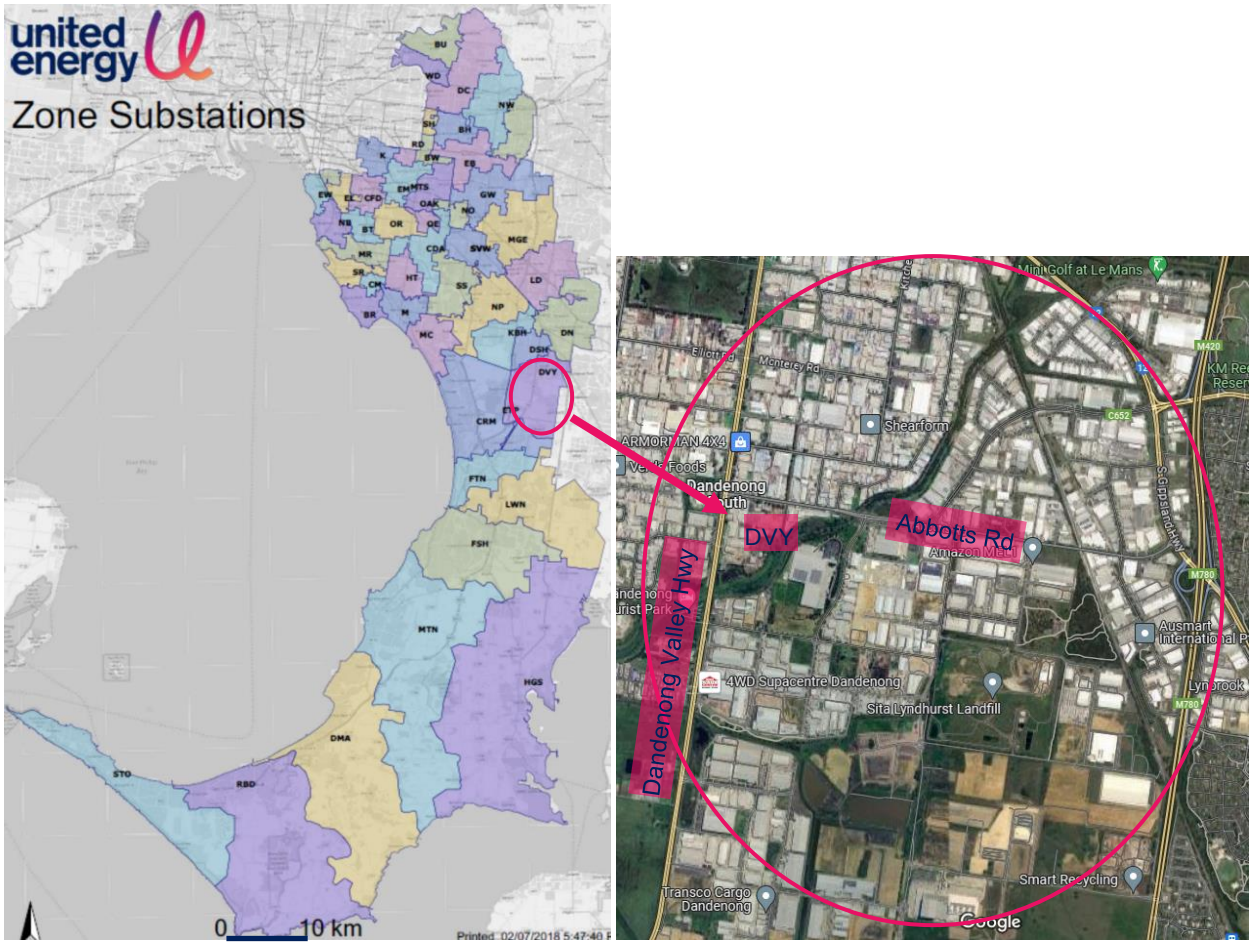

Figure 2: DVY Supply Area

5.2 Description of the Identified Need

UE has prepared this report to assess whether the reliability and safety needs of DVY could be realised either fully, or in part through non-network or SAPS options. To assess whether a non-network or SAPS option could be beneficial, it is important firstly to define the identified need for this location.

The identified need at DVY is to;

i) protect power sector workers and members of the public from harm caused by equipment failure (Safety); and

ii) continue to maintain a reliable power supply to the residences and businesses that are dependent on the supply from this distribution network (Reliability).

The condition of the protection and control relays, RTU, and other secondary assets at DVY is deteriorating, and many are now technically obsolete, being unsupported by equipment suppliers with no spares.

UE has assessed there is now an unacceptable risk of asset failure, with significant consequences for safety, and for the reliability of electricity supply to UE's customers within the DVY supply area. The secondary assets are no longer considered fit for purpose and need to be safely removed from service. While there is a need to remove these assets from service, there also remains a need to continue to supply electricity to customers within the DVY supply area serviced by these assets. The reliability and safety risk cost for the DVY supply area is considered to be significant.

The assets whose condition is of key concern are identified below and in Appendix A:.

5.2.1 RTU Condition

The Remote Terminal Unit (RTU) is the only communication interface between DVY's protection and control relays and UE's network control centre (NCC), providing remote control and monitoring capability of the zone substation via SCADA. The condition of the RTU for provision of supervisory control and data acquisition (SCADA) telemetry services is poor, being at risk of failure and is technically obsolete. The communication protocol it uses for communication with all other protection and control relays within the zone substation is legacy and special hardware is required for protocol conversion. The hardware is no longer supported by the vendor and UE has very limited spares.

5.2.2 Protection and Control Equipment Condition

Protection and control systems are critical to the safe and reliable operation of the network. These systems are designed to detect the presence of power system faults and/or other abnormal operating conditions, and to automatically isolate the faulted network by the opening of appropriate high-voltage circuit breakers.

Failure to isolate power system faults will invariably result in severe damage to network assets, presenting a serious health and safety hazard to the public, and greatly increases the risk of fire starts.

Most of the protection and control relays at DVY are now technically obsolete, being no longer supported by vendors, and no spare parts. All of these factors increase the likelihood of a power system fault not being detected and safely isolated, or a maloperation.

5.3 Quantification of the Identified Need

Table 3 summarises the forecast impact of the identified network need discussed in Section 5.2 on customers. The table shows over a 15-year forecasting period, the risk costs and hence the potential market benefits considered, including:

- Expected unserved energy (EUE) cost, which is the value of the energy at risk after taking into account the probability of asset failures or malfunctions at DVY, representing the deterioration in supply reliability within the DVY supply area.
- Safety risk cost, which is the cost of harm to UE's staff and the general public located within the DVY supply area, as a result of safety incidents caused by asset failures or malfunctions at DVY.
- Total risk which is the sum of the expected unserved energy cost and the safety risk cost.

Table 3: DVY Reliability and Safety Risk Quantification ($'000, Real 2024)

Financial Year	Expected Unserved Energy Cost	Safety Risk Cost[3]	Total Risk Cost
2024	324	238	563
2025	477	255	732
2026	627	276	902
2027	761	290	1051
2028	898	312	1210
2029	1023	327	1350
2030	1141	351	1492
2031	1255	373	1629
2032	1385	413	1798
2033	1554	457	2012
2034	1612	467	2079
2035	1633	454	2087
2036	1712	468	2180

[3] For simplicity, no AFAP disproportionate factors have been applied to the Safety Risk Cost.

Financial Year	Expected Unserved Energy Cost	Safety Risk Cost[3]	Total Risk Cost
2037	1788	488	2276
2038	1859	509	2367

For the purposes of this RIT-D, economic evaluations are undertaken over a 15-year period, commensurate with the asset life of secondary assets.

6. Key Assumptions in Relation to the Identified Need

6.1 Method for Quantifying the Identified Need

UE adopts its Asset Risk Quantification Guide (UE-GU-2011) in quantifying safety and reliability risks associated with asset condition failures and their consequences. This modelling is based on Weibull distribution parameters for each asset class.

6.1.1 Safety

The safety risk to UE employees and the general public, arising from potential failure or malfunction of network assets is quantified by UE using a safety risk cost, based on the asset conditions. The ability to maintain a safe network for the DVY supply area is increasingly difficult due to the poor and deteriorating condition of the DVY secondary system assets.

UE's approach to safety risk is based on the As Far As Practicable (AFAP) principle. The AFAP principle recommends safety risk reduction measures be implemented unless the cost, time or form of the risk reduction measure is grossly disproportionate to the benefit gained from the reduced risk. A "Do Nothing" (or run to failure) approach would result in the poor condition assets remaining in service, deteriorating further, and completely failing to address any safety concerns.

6.1.2 Reliability

UE's reliability planning standard for its zone substation assets is based on a probabilistic planning approach which quantifies Expected Unserved Energy (EUE) which is defined in terms of megawatt hours (MWh) per annum of energy not supplied, taking into account the probability of an asset failure or malfunction, and expresses this financially by applying a Value of Customer Reliability (VCR) ($/MWh).

6.2 Forecast Maximum Demand

DVY provides power to approximately 4,294 customers to parts of the suburbs of Dandenong South, Lyndhurst, Bangholme and Carrum Downs, with the majority of the load at DVY comprising of industrial and commercial customers.

A credible network, non-network or SAPS solution should consider the forecast maximum demand for the DVY supply area shown in Table 4. Forecasts of the 10% PoE and 50% PoE summer maximum demand and power factor at DVY are presented. These forecasts are based on an expected economic growth scenario.

Table 4: DVY Maximum Demand Forecast

Time Period	Power Factor	10% PoE (MVA)	50% PoE (MVA)
2024-25	0.98	91.7	89.1
2025-26	0.98	94.8	92.1
2026-27	0.98	96.8	94.4
2027-28	0.98	98.3	96.1
2028-29	0.98	99.8	97.7

6.3 Forecast Annual Energy

A credible network, non-network or SAPS solution should consider the annual energy requirements of customers within the DVY supply area as shown in Table 5.

Table 5: DVY Annual Energy Forecast

Time Period	Energy (GWh pa)
2024-25	421
2025-26	435
2026-27	446
2027-28	454
2028-29	462

6.4 Characteristic of Load Profile

A credible network, non-network or SAPS solution should be able to support the load profiles below.

UE has prepared load profiles that are characterised by the use of profiles from the most recent 50% PoE year. Based on this approach, the 2022/23 historical demand profile has been prepared and presented herein.

The coincident maximum demand of the customers within the DVY supply area occurs during working weekday periods. The annual demand profile at DVY expressed as a percentage of the 50% PoE maximum demand listed in Table 4, is illustrated in Figure 3.

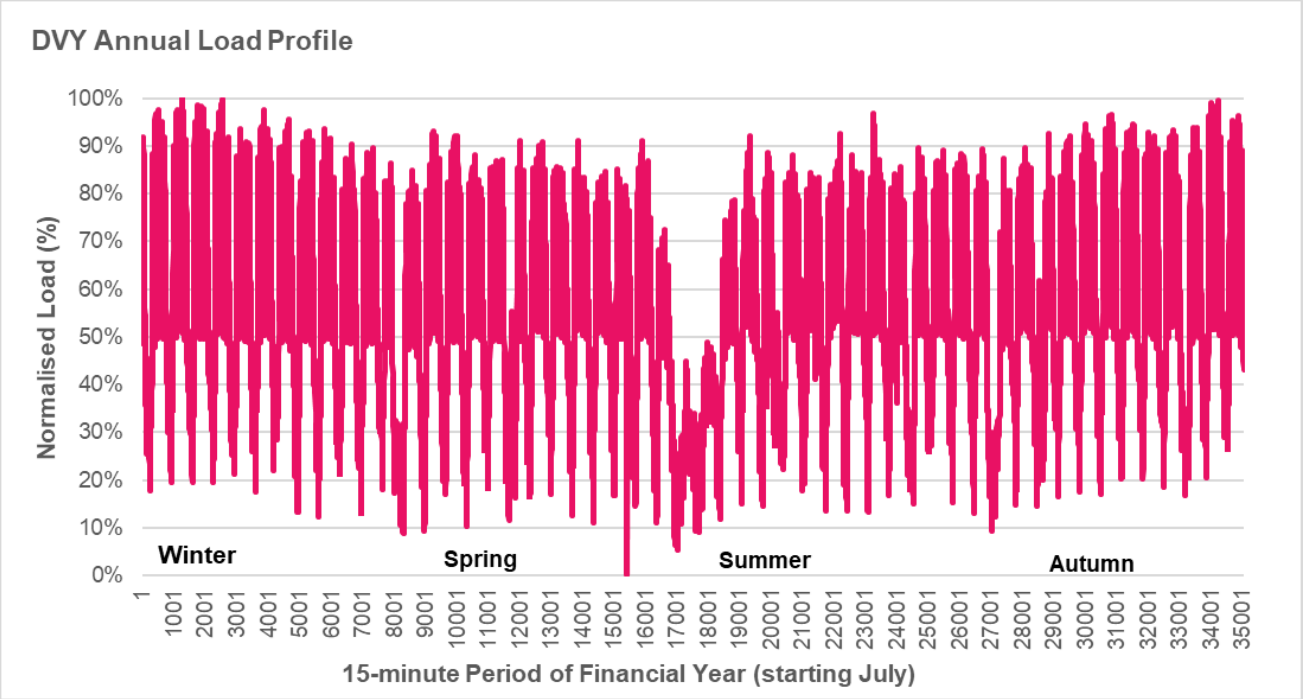

Figure 3: Annual Load Profile at DVY

The load profile on the day of a 50% PoE summer maximum demand is illustrated in Figure 4. The prominence of industrial and commercial load within the DVY supply area, results in a maximum demand occurring during the morning.

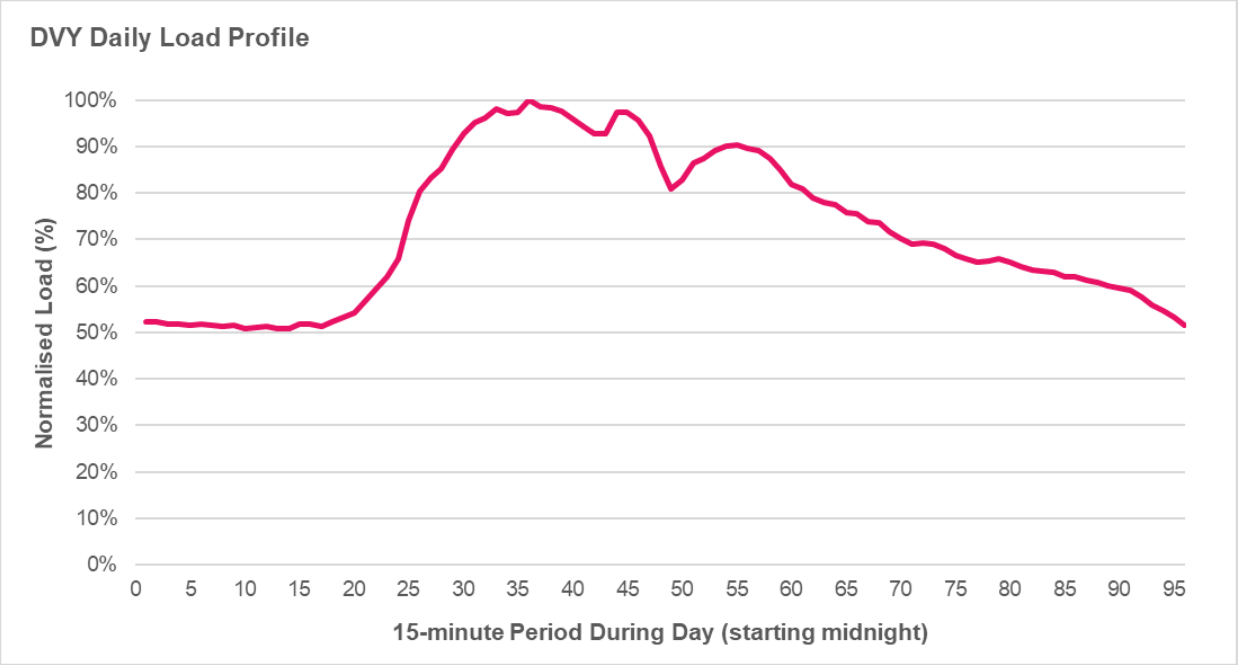

Figure 4: Load Profile on Day of Summer Maximum Demand at DVY

Figure 5 shows the normalised annual load-duration curve at DVY for a 50% PoE summer maximum demand year.

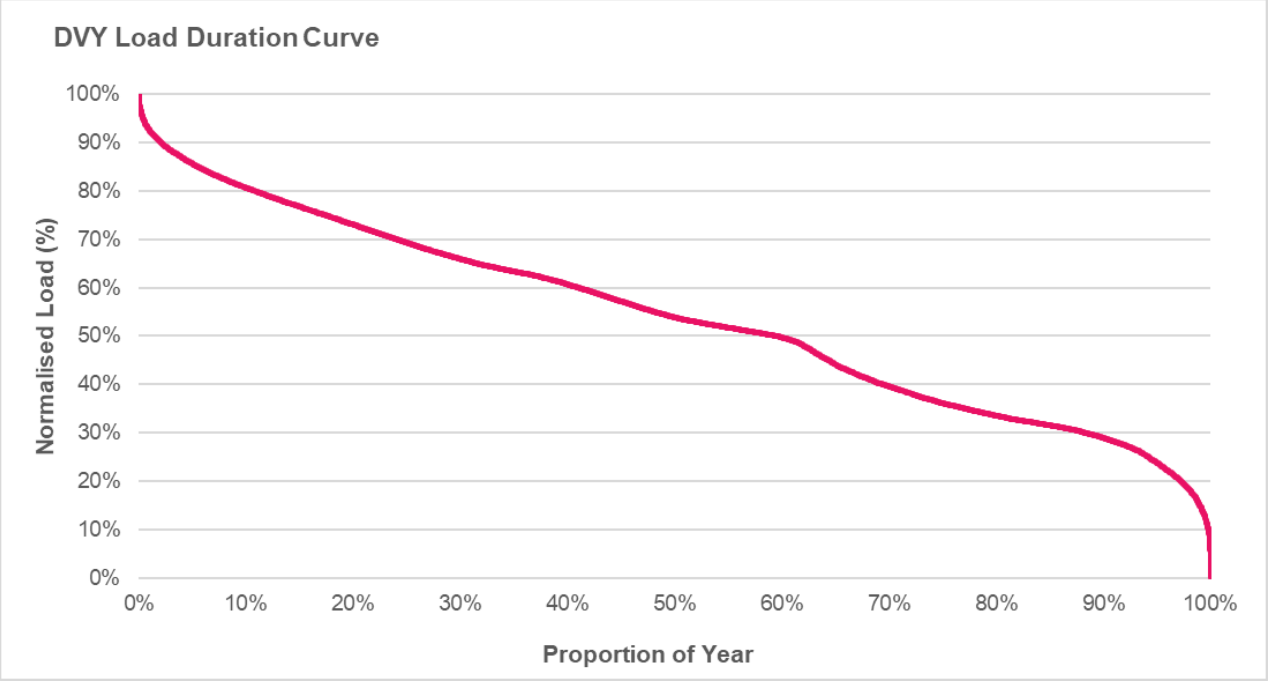

Figure 5: Annual Load-Duration Curve at DVY

The load characteristics can vary marginally from year to year due to changes in weather, solar generation systems growth, and underlying changes in the customers' load usage. Figure 5 shows that load in excess of 80% of the maximum demand lasts for less than 10% of the year. It also shows that DVY normally never operates below 10% of its maximum demand which tends to be in the Christmas-early January industry shutdown period.

6.5 Load Transfer Capacity and Supply Restoration Times

A credible network, non-network or SAPS solution can assume the load transfer capability between DVY and the neighbouring networks of DSH and DN (among others) to be 15.4 MVA for summer 2024/25, noting that most of the load transfer capability is only available from the northern side of the DVY supply area.

Future load transfer capability levels between DVY and the neighbouring network can be assumed to remain relatively constant.

A credible network, non-network or SAPS solution should provide for supply to be restored within 60 minutes (on average) following the loss of a plant item causing an outage.

6.6 Discount Rates

To compare cash flows of options with different time profiles, it is necessary to use a discount rate to express future costs and benefits in present value terms. The choice of discount rate will impact on the estimated present value of net market benefits, and may affect the ranking of alternative options. A discount rate of 7.0 per cent is used[4].

6.7 Asset Ratings

The existing capabilities of DVY zone substation for summer and winter are presented in Table 6 for all plant in service (N), and for one transformer out of service (N-1).

Table 6: Summary of DVY Ratings (MVA)

Zone Substation	Summer Cyclic Rating at 40°C		Winter Cyclic Rating at 10°C	
	N	N-1	N	N-1
DVY Import[5]	131.1	87.4	154.7	103.1
DVY Export[6]	-99.0	-66.0	-99.0	-66.0

6.8 Value of Customer Reliability

Location-specific Value of Customer Reliability (VCR) is used to value reliability of supply. The locational VCR for the DVY supply area was derived from the sector VCR estimates provided by the AER, weighted in accordance with the composition of the load, by sector, and escalated by CPI. This is summarised in Table 7.

Table 7: Summary of Location Specific VCR

Zone Substation	VCR ($ per MWh, Real 2024)
DVY	54,550

6.9 Potential Credible Options to Address the Identified Need

UE has developed a set of potential credible options to address the identified need relating to the Dandenong Valley Zone Substation Secondary Systems Assets Condition.

To address the safety need, credible network, non-network or SAPS options would be required to have characteristics that would allow the safe decommissioning or rectification of the DVY secondary systems. Furthermore, to address the reliability need in anticipation of the safe decommissioning of the DVY secondary systems, credible options would need to be capable of supplying the annual energy requirements of customers supplied by DVY, and the forecast maximum demand at DVY over the planning horizon.

Table 8 provides a summary of the base case option, using the risk costs presented earlier in Table 3.

[4] Based on AEMO's 2023 IASR, Table 31.
[5] Power flow towards customer load.
[6] Power flow towards the transmission network.

Table 8: Base Case

Option	Description
Do Nothing (status quo)	This base case option involves running the DVY secondary systems to failure. That is, continue with existing maintenance of secondary systems, coupled with replacement upon failure. Given this option does not address the identified need at all, the cost of unplanned asset failures is represented by the full value of both the EUE and the safety risk cost. The present value of all costs (EUE and safety risk) is $15.47 million (Real, 2024).

Table 9 provides a summary of credible options that could address the identified need.

Table 9: Credible Options Under Consideration

Option	Description
1- Replace the DVY secondary systems (by November 2025)	This option involves a replacement of all the secondary systems at DVY, built to UE's latest design standards. This option addresses both the safety need and reliability need. The total capital cost of this option is $7.60 million (Real, 2024). The present value of all costs (capital, O&M, EUE and safety risk) is $9.01 million (Real, 2024).
2 - Replace the DVY RTU, then the remaining secondary systems two-years later (by November 2027)	This option involves a replacement of the RTU first followed by the remaining secondary systems at DVY two years later, built to UE's latest design standards. This option addresses the majority of the safety need and reliability need. The total capital cost of this option is $9.16 million (Real, 2024). The present value of all costs (capital, O&M, EUE and safety risk) is $10.03 million (Real, 2024).

A credible option needs to be technically and economically feasible, and able to be implemented within a reasonable timeframe to address the identified need. Table 10 describes the options that have been considered by UE and are regarded as not being credible for the reasons set out below. These include all remaining network, non-network and SAPS options.

Table 10: Options Regarded as Being Not Credible

Option	Description
Decommission DVY and transfer all load to DSH and DN	This option allows for the decommissioning of DVY by transferring all of its load to the adjacent zone substations DN and DSH. 75MW of new feeder capacity (approximately 7 new high voltage 22 kV feeders) would need to be established to transfer DVY's entire load base to these zone substations. Both DN and DSH would each need to be augmented with an additional 20/33 MVA transformer and 22 kV switchboard. Given the scale of the works required to achieve this outcome would be in excess of $30 million, this option is not regarded as credible.
Power factor correction	The power factor at DVY is currently close to unity at times of maximum demand, and there is no further opportunity to reduce demand at the network or customer level as seen by DVY. Therefore this option is not credible, because it cannot technically address the identified need in relation to reliability or safety risks associated with deteriorating asset condition.

Option	Description
Demand response programmes	Demand response programs are generally designed for peak demand management. The ability of all customers to be self-sufficient in their electricity demand at all times and for all year round to meet the identified need, is considered to be unfeasible, as it effectively requires all customers within the DVY supply area to disconnect from the network. Hence this option is not credible.
Customer and/or community intermittent renewable generation and energy storage	Distributed generation of up to 75 MW using solar PV is likely to require more than 75 hectares of land[7]. Devoting this amount of land to energy production in a dense, urban environment is unlikely to be feasible. Nevertheless, coupling this with customer solar PV installations in the DVY supply area, particularly with the availability of commercial and industrial warehouse roof-space, could reduce the amount of additional generation required at a competitive cost. The challenge however lies in the provision of storage to back-up the solar PV panels when they are not operating (including during the evenings). A viable storage option that meets the maximum demand at DVY and reliably meets customer requirements requires 'N' batteries (where 'N' ≥ 2) each able to supply (75 ÷ N) MWp, each with an energy to power ratio of around 13[8]. This would enable the system to meet maximum demand and coupled with solar PV, supply the annual energy needs. The costs of the storage alone are likely to exceed those of the preferred network option. For example, the fully installed capex cost of storage is approximately $0.9 million per MWh[9], totalling $878M (excluding land). Adding generation, demand management or efficiency measures to this option would reduce the battery requirements stated above. This option would lead to a much higher marginal cost to the customer compared to a network solution cost, and the gap is unlikely to be covered from other market-based revenues. The planning process required for this type of investment, also means this is unlikely to be completed in time to meet the identified need. The storage resources owned by individual customers indicates that no potential existing customer-owned storage would be large enough to meet the identified need. Therefore this option is not considered to be credible.
Dispatchable generation and/or Customer standby generation	A viable generation option that meets the maximum demand at DVY and reliably meets customer requirements requires at least two generators to allow maintenance on one generator during off-peak times, each able to supply up to (75 ÷ N) MWp, where N is the number of generators. This would enable the system to meet maximum demand and supply the annual energy needs. The costs of this are likely to exceed those of the preferred network option. For example, the capex cost of small gas-fired generator is approximately $1.25 million per MW[10]. For 75 MW of generation, the cost will be over $94M, excluding land, connection and operating costs. Adding storage, demand management or efficiency measures to this option would reduce the generation requirements stated above, and potentially the costs. This option would lead to a much higher marginal cost to the customer compared to a network solution cost, and the gap is unlikely to be covered from other market-based revenues. The planning process required for this type of investment, also means this is unlikely to be completed in time to meet the identified need. The maximum demands of individual customers indicate that no potential existing customer-owned generation (standby or otherwise) would be large enough to meet the identified need. Therefore this option is not considered to be credible.

[7] https://www.quora.com/How-much-land-is-required-to-setup-a-1MW-solar-power-generation-Unit-1
[8] 354,000 MWh pa / 365 days pa / 75 MW = 13.
[9] https://aemo.com.au/-/media/files/stakeholder_consultation/consultations/nem-consultations/2022/2023-inputs-assumptions-and-scenarios-consultation/supporting-materials-for-2023/aurecon-2022-cost-and-technical-parameter-review.pdf
[10] https://aemo.com.au/-/media/files/electricity/%E2%80%8Cnem/%E2%80%8Cplanning_and_%E2%80%8Cforecasting/%E2%80%8Cinputs-assumptions-methodologies/%E2%80%8C2021/Aurecon-Cost-and-Technical-Parameters-Review-2020.pdf

Option	Description

7. Technical Characteristics of Non-Network Options

This section describes the minimum technical characteristics that a non-network or SAPS option would be required to deliver to address the identified need.

Like the network options, credible non-network and SAPS options would be required to have characteristics that would allow the safe decommissioning of DVY, and would need to be capable of supplying the annual energy requirements of all customers supplied by DVY, and the maximum demand at DVY over the planning horizon.

A credible non-network or SAPS option, or any combination of those (including with a network option) must satisfy timing, operational and the minimum technical requirements stipulated below.

7.1 Size of Support

Table 11 outlines the estimated amount of load reduction, or additional generation needed to be supplied by a credible non-network or SAPS solution within the DVY supply area to address the identified need. These are the minimum requirements, because the values reflect the reduced requirement needed due to the availability of load transfer capability away from DVY to its surrounding zone substations.

Table 11: Minimum Peak Demand and Annual Energy Offsets Required from Non-Network or SAPS Solutions

Year	Load at Risk (MVA)	Hours at Risk (Hours)	Minimum Non-Network or SAPS Support Required	
			Expected GWh pa	Expected MWp
2024-25	76.3	8760	354	74.8
2025-26[11]	79.4	8760	368	77.8
2026-27	81.4	8760	377	79.8
2027-28	82.9	8760	384	81.2
2028-29	84.4	8760	391	82.7

7.2 Time of Year, Duration and Location of Support

Proposed non-network or SAPS options, at a minimum, must be capable of supplying the entirety of the DVY supply area maximum demand and annual energy, excluding those areas that lie on the northern and western side of DVY that border with DSH and DN, that are able to be transferred away to those neighbouring zone substations, utilising the available transfer capability. This service is required no later than by the end of 2025.

7.3 Reliability of Support

Proposed non-network and SAPS options must be capable of reliably meeting electricity demand under a range of conditions, and be able to maintain reliability and quality of supply levels for customers supplied within the DVY supply area.

As such, redundancy may need to be built into a non-network or SAPS solution in order to maintain reliability of supply.

If the non-network option is a generator operating in parallel with UE's network, the generator must comply with the requirements set out in UE's Embedded Generation Network Access Standards (Document No. UE-ST-2008.X).

[11] Year of preferred network option.

8. Conclusion and Next Steps

8.1 Conclusion

Given the size of the support needed from a non-network or SAPS solution, and it being required at all times of the year to maintain supply reliability within the DVY supply area (following the safe decommissioning of DVY), it is unlikely that a non-network or SAPS option could be technically and economically viable to address the identified need.

In conclusion, this Notice of Determination report demonstrates that none of the non-network or SAPS options are potentially feasible in this instance. The analysis demonstrates that there are no combinations of non-network or SAPS options, or in combination with network options, that are likely to adequately meet the criteria that would require the publishing of, and consultation on a RIT-D options screening report.

8.2 Next Steps

The total cost of the most expensive credible network option to address the *Dandenong Valley Zone Substation Secondary Assets Condition* identified need, is less than the trigger threshold of $12 million[12] for the publication of and consultation on a Draft Project Assessment Report (DPAR).

Therefore, UE shall now prepare and publish a Final Project Assessment Report (FPAR), as required under NER clause 5.17.4, paragraphs (o) to (s), which will present a detailed economic assessment of all credible network options that address the identified need, and will identify the preferred option and its timing.

The FPAR shall provide information required under NER clause 5.17.4, paragraph (j), and will apply the latest available information on reliability and safety risk costs associated with the identified need, and the project cost estimates, in evaluating the economic viability of the preferred option against the alternative options considered.

UE intends to publish the FPAR by 31st May 2024.

[12] https://www.aer.gov.au/networks-pipelines/guidelines-schemes-models-reviews/cost-thresholds-review-for-the-regulatory-investment-tests-2021

Appendix A: Secondary Assets Photos

A significant proportion of the protection, control, communications and auxiliary supply systems within the DVY control building are in a poor condition and technically obsolete (with no vendor support and limited spares). UE has assessed there is now an unacceptable risk of asset failure, with significant consequences for safety, and for the reliability of electricity supply to UE's customers within the DVY supply area.



Figure 6: In-Service Protection, Control & Communications Equipment at DVY