Low Voltage Embedded Generation Network Access Standard – Capacity Greater Than 200kVA

UE-ST-2008.2

united energy

Table of Contents

1. Introduction 1

1.1 Purpose of Document 1
1.1.1 LV EG IES Connection Limits 1
1.1.2 LV Non-IES EG Connection Limits 2
1.1.3 Combined LV EG IES and Non-IES System 2
1.2 Document Scope 2
1.3 Obligations 2
1.4 LV EG Assessment Considerations 3

2. Definitions and Abbreviations 4

2.1 Definitions 4
2.2 Acronyms 5
2.2.1 Terminology 6
2.2.2 Subcategories 6

3. Relevant Rules, Regulations, Standards and Codes 7

3.1 Standards and Codes 7
3.2 Legislation and Regulations 8

4. Fees and Charges 8

5. Technical Requirements for LV EG IES 9

5.1 Labelling and Signage 9
5.2 Maximum System Capacity 9
5.3 Generation Control 9
5.3.1 Export Limits at Connection Point 9
5.3.2 Site Generation Limit Downstream of Connection Point 10
5.4 Inverter Energy System 10
5.5 Network Connection and Isolation 10
5.5.1 LV EG IES shared with multiple NMIs 10
5.5.2 LV EG IES Located on a Different Land Title 11
5.5.3 Electric Vehicle Reverse Power Transfer 11
5.6 Earthing 12
5.7 Fault Level Contribution 12
5.8 Protection 12
5.8.1 Overcurrent and Earth Fault Protection 13
5.8.2 Inverter Integrated Protection 13
5.8.3 Interface Protection 14
5.8.4 Switchgear and control gear requirements 16
5.8.5 Interlocking 17
5.9 Operating Voltage and Frequency 17
5.10 Metering 17
5.11 Power Quality 17
5.11.1 IES Volt Response Modes 17
5.11.2 Power Factor Control 18
5.11.3 Network Ancillary Services 18
5.12 Emergency Backstop Controls 19
5.12.1 CSIP-AUS Communication Requirements 19

5.13 LV Embedded Networks with Embedded LV EG 20
5.13.1 Interface Protection for Embedded Networks 20
5.13.2 Remote Backstop for Embedded Networks 20
5.14 Communications Requirements for Monitoring Systems 20
5.15 Data and Information 21
5.15.1 Static Data and Information 21
5.15.2 Dynamic Data and Information 21
5.16 Cybersecurity 21
5.17 Technical Studies 21
5.17.1 Voltage Rise Calculations 22
5.17.2 Fault Level and Protection Settings Report 22
6. Testing and Commissioning for LV EG IES 23
6.1 Emergency Backstop CSIP-AUS Registration, Commissioning and Capability Testing 24
7. Operations and Maintenance 25
8. Technical Requirements for LV Non-IES EG 26
8.1 Labelling and Signage 26
8.2 Maximum System Capacity 26
8.3 Generation Control 26
8.3.1 Export Constraints at Connection Point 26
8.4 Network Connection and Isolation 27
8.4.1 LV Non-IES EG Located on a Different Land Title 27
8.5 Earthing 27
8.6 Fault Level Contribution 28
8.7 Protection 29
8.7.1 LV Non-IES EG Integrated Protection 29
8.7.2 Backup Protection 29
8.7.3 Special Operational Conditions 32
8.8 Switchgear and Control Gear Requirements 33
8.9 Interlocking 33
8.10 Operating Voltage and Frequency 33
8.11 Metering 33
8.12 Power Quality 33
8.12.1 LV Non-IES Voltage Response Modes 33
8.12.2 Network Ancillary Services 34
8.13 LV Embedded Networks with Embedded LV EG 34
8.14 Communications Systems 34
8.15 Data and Information 34
8.15.1 Static Data and Information 34
8.15.2 Dynamic Data and Information 34
8.16 Cybersecurity 34
8.17 Technical Studies 35
8.17.1 Voltage Rise Calculations 35
8.17.2 Fault Level and Protection Settings Report 35
9. Testing and Commissioning for LV Non-IES EG 36
10. Operations and Maintenance 37
11. Modelling 37

12. Generator Monitoring Meter (Network Device) 37

12.1 GMM Installation Requirements 38
12.1.1 Current Transformer and CT Chamber 38
12.1.2 Installation 38
12.1.3 Control Signal Wiring 38
12.1.4 Access 38
12.1.5 Configurations with Multiple GMM 38
12.1.6 Off-Grid Operation 38
12.1.7 Equipment Replacement 39
12.1.8 Alternative Disconnection Capability 39
12.2 Testing and Commissioning 39
12.3 Labelling 39

Appendix A: Deviations from the National DER Connection Guidelines 40

Appendix B: Typical Configurations 42

Appendix C: Typical Configurations for Embedded Networks 46

Appendix D: Generator Monitor Wiring Diagrams 49

Appendix E:. Sample Offer to Connect 51

Appendix F:. Static Data and Information 51

List of Figures

Figure 1: Shared LV EG System 11
Figure 2: Multiple Land Titles....11
Figure 3: Typical Wireless Base Protection Trip Scheme 14
Figure 4: Typical Remote Trip Scheme....15
Figure 5: Application of Voltage Rise Requirements for a Typical LV EG IES Installation 17
Figure 6: Multiple Land Titles Under the Same Owner 27
Figure 7: Example of Earthing Configuration....28
Figure 8: Typical Remote Trip Scheme....32
Figure 9: GMM Labelling....39
Figure 10: Typical GMM Configuration....42
Figure 11: Typical GMM Configuration with Synchronous Generation 43
Figure 12: Typical CSIP-AUS Configuration with Compliant Inverters....44
Figure 13: Typical CSIP-AUS Configuration with Gateway Device....45
Figure 14: Typical CSIP-AUS Configuration....46
Figure 15: Typical CSIP-AUS Configuration with Export Limited Individual Buildings 47
Figure 16: Typical GMM Configuration....48
Figure 17: Typical Wiring Diagram for Generator Monitoring Meter....49
Figure 18: Typical Wiring Diagram for Generator Monitoring Meter....50

List of Tables

Table 1: LV EG IES Capacity and Export Limits....1
Table 2: LV Non-IES EG Capacity and Export Limits....2
Table 3: Terms and Definitions....4
Table 4: Acronyms....5
Table 5: Standards and Codes....7
Table 6: Applicable Legislation and Regulations....8
Table 7: VEDC Fault Level Limits....12
Table 8: LV EG IES Protection Requirements....12
Table 9: Australia A Inverter Integrated Protection Settings....13
Table 10: Interface Protection Requirements 14
Table 11: Passive Anti-Islanding Protection....15
Table 12: Australia A Volt-watt Response Maximum Set Point Values....18
Table 13: Volt-var Response Set Point Values....18
Table 14: Energy Storage Charging Response Mode (230V Base Voltage)....18
Table 15: Embedded Network Interface Protection Requirements 20
Table 16: Technical Studies Required for LV EG IES Connections....21
Table 17: Testing and Commissioning Requirements for LV EG IES Connections 23
Table 18: VEDC Fault Level Limits....28
Table 19: Protection Requirements for LV Non-IES EG 29
Table 20: LV EG Integrated Protection Requirements....29
Table 21: LV Non-IES EG Backup Protection Requirements 30
Table 22: LV Non-IES EG Anti-Islanding Protection Requirements....31
Table 23: Suitability of ROCOF and Vector Shift for Non-IES LV EG 31
Table 24: Technical Studies Required for LV Non-IES EG Connections....35
Table 25: Testing and Commissioning Requirements for LV Non-IES Connections....36

Table 26: Table of Deviations from National DER Connection Guidelines 40

1. Introduction

This document provides the technical requirements for the equipment and installation of low voltage (LV) embedded generation (EG) connections with a total system capacity greater than 200kVA to United Energy's (UE) low voltage distribution networks. This document has been prepared based on present network conditions and is subject to change. This document complies with the ENA National Distributed Energy Resources (DER) Connection Guidelines for LV EG Connections, with the exception of UE specific requirements with deviations presented in Appendix A: Deviations from the National DER Connection Guidelines.

This document covers the following categories of low voltage connected generation:

1. Inverter-based generation with a total inverter capacity > 200kVA
2. Non-inverter-based generation

This document shall be read in conjunction with Embedded Generation Customer Connection Procedure (UE-PR-2008) which details the EG connection services offered and the application process.

1.1 Purpose of Document

The purpose of this document is to provide proponents of medium to large scale LV EG connections information about their obligations for connection to and interfacing with the UE low voltage distribution network.

A LV EG connection type is defined in Table 1 and Table 2 provided:

1. It is intended to be connected to and is capable of operating in parallel with any part of the LV distribution network
2. It meets all other technical requirements set out in this document
3. A Certificate of Electrical Safety (COES) is issued for the installation and provided to UE
4. It consists of either Inverter Energy System (IES) or non-IES (synchronous or asynchronous LV EGs), and/or Energy Storage System (ESS) with a total system capacity shown in Table 1 and Table 2

1.1.1 LV EG IES Connection Limits

Single phase customers are not permitted to apply to connect generation covered by this standard. Single phase customers should refer to Basic Micro EG Network Access Standard (UE-ST-2008.1) which covers connections with a capacity of less than 200kVA.

Table 1: LV EG IES Capacity and Export Limits

Network Connection Type	Three Phase
Minimum total installed capacity (based on maximum continuous inverter rating)	> 200kVA
Maximum total installed capacity (based on maximum continuous inverter rating)	Subject to network assessment. Up to the maximum rating[2] of the main circuit breaker, service cable and total capacity of less than 5MVA[3]
Maximum export[4]	Subject to network assessment. Up to the maximum rating[2] of the main circuit breaker, service cable and total capacity of less than 5MVA[3]
Low static export limit[5]	0kW

Notes:

1. Table 1 applies to LV EG IES connections that exceed 200kVA total installed capacity. The capacity limits in Table 1 are the aggregate maximum continuous inverter rating installed behind the meter.
2. The maximum rating of the customer owned main circuit breaker and associated wiring is assumed to be appropriately sized to match the maximum thermal rating of upstream distribution assets e.g. service cable/line and transformer.
3. To align with the maximum capacity stipulated in Chapter 5A of the National Electricity Rules, the total LV EG IES capacity can be up to less than 5MVA. However, the maximum total installed capacity is typically limited to 2MVA per transformer connection due to the standard 50kA LV short circuit fault rating for LV switchgear.

4. Maximum export – the approved export limit may be equal to or less than the total installed capacity and is subject to the EG system being backstop enabled.
5. Low static limit will apply for the following conditions:

a) When the CSIP-AUS failsafe limit activates upon loss of communication between the EG system and the UE utility server. This will be set via the UE utility server upon establishing CSIP-AUS communications and completing the commissioning process.

6. The above table is subject to technical requirements as set out in Section 5.

1.1.2 LV Non-IES EG Connection Limits

UE do not permit a non-IES installation to operate in parallel with the network for single phase, two phase, or split phase connections.

Table 2: LV Non-IES EG Capacity and Export Limits

Network Connection Type	Three Phase
Maximum total installed capacity	Up to the maximum rating[3] of the main circuit breaker, service cable and total capacity of less than 5MVA[4]
Maximum export	Up to the maximum rating[3] of the main circuit breaker, service cable and total capacity of less than 5MVA[4]

Notes:

1. The above table is subject to technical requirements as set out in section 8.
2. Model Standing Offer (MSO) does not apply to LV non-IES EG.
3. The maximum rating of the customer owned main circuit breaker and associated wiring is assumed to be appropriately sized to match the maximum thermal rating of upstream distribution assets e.g. service cable/line and transformer.
4. To align with the maximum capacity stipulated in Chapter 5A of the National Electricity Rules, the total LV EG IES capacity can be up to less than 5MVA. However, the maximum total installed capacity is typically limited to 2MVA per transformer connection due to the standard 50kA LV short circuit fault rating for LV switchgear.

1.1.3 Combined LV EG IES and Non-IES System

For LV EG systems consisting of both LV EG IES and LV non-IES EG, the system capacities and export shall satisfy the requirements of both Table 1 and Table 2. This means that only proponents with a three phase network connection are allowed to have installations consisting of both LV EG IES and LV non-IES EG.

1.2 Document Scope

This document applies to LV EG systems proposals for connection to the grid. It applies to both new connections of LV EG systems and modifications to existing LV EG systems.

This document sets out the common requirements for both LV EG IES and LV non-IES EG systems in sections 1 to 4. LV EG IES specific technical, testing and commissioning, and operation and maintenance requirements are set out in Part A of this document. LV non-IES EG specific technical, testing and commissioning, and operation and maintenance requirements are set out in Part B of this document.

It excludes the following:

a) EG Connections with an aggregate capacity of less than or equal to 200KVA

b) EG units covered by HV or Sub-transmission EG Network Access Standards

c) Electric vehicles, unless the on-board battery storage system is capable of synchronising to the network (in which case the requirements in this document shall apply)

d) DER systems that do not generate electricity, including demand response / demand management systems, unless they impact on the ability of the LV EG system to meet the technical requirements

1.3 Obligations

UE have developed this standard to meet their obligations to ensure the safe and reliable operation of the distribution system for operating personnel, proponents, customers and the general public.

a) The obligations of proponents are:

1. The obligation to comply with the technical requirements as well as relevant national standards, industry codes, legislation and regulations. In the event of inconsistency, legislation and regulations shall prevail, followed by the technical requirements, followed by national standards and industry codes
2. The obligation to not connect additional LV EG units, make modifications or install additional LV EG units, including ESS, without prior written agreement from the Distributor
3. The obligation to comply with their connection agreement
4. The obligation to meet the requirements in the design, installation, operation and maintenance of the LV EG system.

1.4 LV EG Assessment Considerations

The following high-level factors are taken into consideration relative to the proposal at each stage of the Connection Enquiry and Application to Connect process for connections with an aggregate rating above 200kVA:

- Network safety, security and stability
- Network infrastructure availability, capability and capacity to facilitate the proposal
- Any need to refer the proposal to AEMO or another DNSP potentially impacted by the proposal
- Infrastructure and commercial demarcation and crossover, especially when multiple jurisdictions are involved
- Consideration for non-network support opportunities (especially in areas of network constraints identified under UE's Distribution Annual Planning Report)
- Depending on the proposal, suitable communications infrastructure to facilitate technical as well as National Electricity Market (NEM) market control requirement (protection and or LV EG scheduling operation)
- Embedded generation network impact (and nearby proponents)
- Fault Level considerations including LV EG fault level contribution
- Network and proposal interconnection protection
- Network infrastructure thermal capacity
- Network voltage control
- Power factor of LV EG IES
- Power quality of supply generated
- LV EG operations (modus operandi: renewables, base, peaking etc.)
- Network augmentation (i.e. infrastructure upgrade) likely to be required to facilitate the proposal and commercial model such as contestability, construction, ownership, the classification of services provided and associated cost
- Network scope of work delivery timeframe
- All other suitable considerations unique to the proposal
- Compliance to Victorian Service and Installation Rules
- Compliance to Victorian Electricity Distribution Code
- Compliance to Chapter 5A National Electricity Rules
- Existing and in-progress EG applications at the relevant network location

2. Definitions and Abbreviations

2.1 Definitions

For purposes of this Procedure, unless otherwise stated, the following Terms and Definitions shall apply:

Table 3: Terms and Definitions

Term	Definition
Aggregate rating	The summated rating of all AC generation connected to a Point of Connection to the Distribution Network
Connection Agreement	A legally binding document between the Distributor and the proponent stipulating the commercial and technical terms of the LV EG connection
Embedded Generating Unit	A generating unit connected within a distribution network and not having direct access to the transmission network
Embedded generating system	A system comprising of multiple embedded generating units
Distributed Energy Resources	Power generation or storage units that are connected directly to the distribution network
Distributor	Distributed Network Service Provider: United Energy (UE)
Generating Unit	The plant used in the production of electricity and all related equipment essential to its functioning as a single entity.
Generation	The production of electrical power by converting another form of energy in a generating unit
High Voltage	Any voltage greater than 1kV AC
Interface Protection	Interface protection is installed to perform the functions of: coordinating multiple generation system installations at one site, providing protection for generation system installation and islanding protection to the connecting grid as well as preserving safety of grid personnel and the general public. For inverter based generation, the implementation of interface protection is covered by *AS/NZS 4777 grid connection of energy systems via inverters*
Inverter Energy System	A system comprising of one or more inverters together with one or more energy sources (which may include batteries for energy storage), and controls, which satisfies the requirements of *AS/NZS 4777.1* and *AS/NZS 4777.2*.
Low Voltage	The mains voltage as most commonly used in any given network by domestic and light industrial and commercial consumers (typically 230V)
LV embedded generation connection	A connection between a distribution network and a retail proponent's premises for an embedded generating unit, for which an offer in accordance to Chapter 5A of the National Electricity Rules
Micro embedded generation connection	Means a connection between an embedded generating unit and a distribution network of the kind contemplated by *Australian Standard AS 4777*
Market Generating Unit	A generating unit whose generation is not purchased in its entirety by a retailer (and receives payment for generation through the National Electricity Market or Wholesale Electricity Market)
Proponent	A person proposing to become a LV EG (the relevant owner, operator or controller of the embedded generating unit (or their agent))
Point of Connection	The point at which the Service Cable/Line connects to the consumer's terminals
Service Cable/Line	The final span or section of low voltage aerial or underground network that is connected to the consumer's terminals

Term	Definition
Site Generation Limit	The generation export threshold that the embedded generation system cannot exceed, measured downstream of the connection point
Small Generation Aggregator	A person who has classified one or more small generating units as a market generating unit
Small Registered LV EG	A LV EG who elects to register a LV EG with the Australian Energy Market Operator as a market generating unit who would otherwise be entitled to an exemption to register based on size
Standard Connection	A connection service (other than a LV embedded generation connection service) for a particular class (or sub-class) of connection applicant and for which an Australian Energy Regulator approved offer in accordance to Chapter 5A of the National Electricity Rules
Single Wire Earth Return	Parts of the UE electrical distribution networks that use a single live high voltage conductor to supply single-phase or split-phase electric power with higher network impedances, and with distribution supplying low voltages to premises
Technical Requirements Document	The document produced by each Distribution Network Service Provider setting out their requirements for proponents to enable a grid connection, to which these guidelines apply (this document).

2.2 Acronyms

Table 4: Acronyms

Acronym	Definition
AEMC	Australian Energy Market Commission
AEMO	Australian Energy Market Operator
AER	Australian Energy Regulator
AS/NZS	A jointly developed Australian and New Zealand Standard
CBD	Central Business District
CEC	Clean Energy Council
DER	Distributed Energy Resources
DNSP	Distribution Network Service Provider
EG	Embedded Generation
EN	Embedded Network
ENO	Embedded Network Operator
ESS	Energy Storage System
EV	Electric Vehicle
HV	High Voltage
IEC	International Electrotechnical Commission
IES	Inverter Energy System
IPSD	Inverter Power Sharing Device
LV	Low Voltage
NCC	Network Control Center
NEM	National Electricity Market
NER	National Electricity Rules

NMI	National Metering Identifier
ROCOF	Rate of Change of Frequency
SCADA	Supervisory Control And Data Acquisition
SWER	Single Wire Earth Return

2.2.1 Terminology

The following terminology has been used in this document:

- The word “shall” indicates a mandatory requirement to comply with this document
- The word “may” indicates a recommendation that will not be mandatorily imposed on the proponent
- The word “should” indicates a requirement that may be mandatorily imposed on the proponent based on connection specific safety or operational requirements

2.2.2 Subcategories

This document applies to all the following subcategories of LV EG connections unless otherwise specified:

1. LV EG IES capacity > 200 kVA – Any LV EG system with total system capacity as set out in Table 1 for three phase network connection, meeting all relevant technical requirements for LV EG connections set out in this technical requirement document.

Further subcategorised by:

- Exporting
- Non-exporting

2. LV non-IES EG connection – Any LV EG system that is not an IES, with a total system capacity as set out in Table 2 for three phase network connections, meeting all relevant technical requirements for LV EG connections set out in this technical requirement document.

Further subcategorised by:

- Exporting
- Non-exporting

Where:

1. Exporting systems shall be considered to be LV EG systems operating in parallel with the LV distribution network and exporting electricity either via partial-export or full-export into the LV distribution network, where:
   a) Partial-export LV EG systems limit the amount of export into the LV distribution network to an agreed export threshold defined in the connection agreement
   b) Full-export LV EG systems can export into the LV distribution network to the full LV EG nameplate capacity (full AC rating).
2. Non-exporting systems shall be considered to be LV EG systems operating in parallel with the LV distribution network that are not approved to, and limited to ensure they cannot, export electricity into the LV distribution network. It should be noted that non-exporting EG will still contribute to fault levels.

3. Relevant Rules, Regulations, Standards and Codes

3.1 Standards and Codes

This section lists all the Australian and international standards and industry codes which shall apply to the design, manufacture, installation, testing and commissioning, and operation and maintenance of all plant and equipment for LV EG connections to the LV distribution network. The latest version of the Australian and international standards and industry codes shall be used.

In the event of any inconsistency between Australian and international standards and industry codes and these technical requirements, these technical requirements shall prevail.

Table 5: Standards and Codes

Standard	Title
AS/NZS 3000	Electrical installations (known as the Australian/ New Zealand Wiring Rules)
AS/NZS 3010	Electrical installations – Generating Sets
AS/NZS 3011	Electrical installations – Secondary batteries installed in buildings
AS/NZS 4777	Grid connection of energy systems via inverters (multiple parts)
AS/NZS 5033	Installation and safety requirements for photovoltaic (PV) arrays
AS/NZS 5139	Electrical installations - Safety of battery systems for use with power conversion equipment
AS/NZS IEC 60947.6-1	Low-voltage switchgear and control gear – Multiple function equipment - Automatic transfer switching equipment
AS 60034.1	Rotating electrical machines, Part 1: Rating and performance
AS 60034.12	Rotating electrical machines – Starting performance of single speed three phase cage induction motors
AS 60034.22	Rotating electrical machines, Part 22: AC LV EGs for reciprocating internal combustion (RIC) engine driven generating sets
SA/SNZ TR IEC 61000.3.14	Electromagnetic compatibility (EMC), Part 3.14: Limits — Assessment of emission limits for harmonics, inter harmonics, voltage fluctuations and unbalance for the connection of disturbing installations to LV power systems
SA/SNZ TR IEC 61000.3.15	Electromagnetic compatibility (EMC), Part 3.15: Limits — Assessment of low frequency electromagnetic immunity and emission requirements for dispersed generation systems in LV network
AS/NZS 61439	Low-voltage switchgear and control gear assemblies
IEC 62116	Utility-interconnected photovoltaic inverters – Test procedure of islanding prevention measures
IEEE Standard 1547	IEEE Standard for Interconnecting Distributed Resources with Electric Power Systems
CSIP-AUS, IEEE 2030.5	The Common Smart Inverter Profile Australia (CSIP-AUS) implementation of IEEE 2030.5 Standard for Smart Energy Profile Application Protocol.
AS/NZS 1026	Electric Cables – Impregnated Paper Insulated – For Working Voltages up to and including 19/33 (36) kV
AS/NZS 1429.1	Electric Cables – Polymeric Insulated – For Working Voltages 1.9/3.3 (3.6) kV up to and including 19/33 (36) kV
AS/NZS 61000 series	Electromagnetic Compatibility
AS 61869.2	Instrument transformers – current transformers
AS 61869.3	Instrument transformers – inductive voltage transformers
AS 61869.5	Instrument transformers – capacitive voltage transformers

Standard	Title
AS/NZS 60076.5	Power Transformers – Ability to Withstand Short Circuit
AS/NZS 60898.1	Electrical accessories – Circuit Breakers for overcurrent protection for household and similar installations, Part 1: Circuit Breakers for a.c. operation
AS/NZS IEC 60947	Low-voltage switchgear and control gear
IEC 60255	Measuring relays and protection equipment
UL 508	Standard for Industrial Control Equipment

3.2 Legislation and Regulations

This section lists all the relevant legislation and regulations which shall apply to the design, manufacture, installation, testing and commissioning, and operations and maintenance of all plant and equipment for LV EG connections to the distribution network. The latest version of the legislation and regulations shall be applicable.

In the event of any inconsistency between legislation and regulations and these technical requirements, the legislation and regulation shall prevail.

Table 6: Applicable Legislation and Regulations

Document Title	Description
National Electricity Rules Chapter 5A	Electricity Connection for Retail Customers
Electricity Distribution Code	Regulates the distribution of electricity, connections to distribution networks, and the transfer of electricity between distribution systems so that they are undertaken in a safe, efficient, and reliable manner
Electricity Industry Guideline 15 - Connection of Embedded Generation	Provides arrangements for connecting embedded generating units to distribution systems
Victorian Service and Installation Rules	Provides industry agreed technical requirements that meet all legislative and code requirements for the supply and metering related aspects of any connection to the Victorian electricity supply networks
Electrical Safety (Installation) Regulations	Provides details on regulatory obligations for electricity installation works in Victoria

4. Fees and Charges

Refer to UE's website for the types of connection fees applicable to LV EG connections and how these fees are determined. Where network augmentation works are required to accommodate the LV EG connection, a separate quote will be provided to the proponent. This is in addition to the application fees and charges.

Part A – IES Requirements

5. Technical Requirements for LV EG IES

This section details the technical requirements for LV EG IES connections.

5.1 Labelling and Signage

The labels and signs on the installation, including cables, shall be as per *AS/NZS 4777.1*, *AS/NZS 3000* and *AS/NZS 5033*. Site specific labelling for additional energy sources and operating procedure for the energy sources shall be installed at each isolation point that has a possibility of energy feedback from the IES.

5.2 Maximum System Capacity

Refer to Table 1 for details of maximum system capacity.

5.3 Generation Control

5.3.1 Export Limits at Connection Point

The maximum export limit of LV EG IES connections is as per Table 1.

The export limit where required will be negotiated with the proponent as part of the application process. The export limit imposed may be a "hard" or "soft" limit, consistent with the definitions within *AS4777.1*. Generation limit control will need to comply with Clause 6.2 of *AS/NZS 4777.2*.

Where an export limit is required to be implemented by the proponent, the proponent shall:

- Ensure that all equipment is installed and configured so that the export limit can be applied. This includes, but is not limited to, installation of a dedicated export meter, inverter settings and configuration.
- Verify that the export limiting device is functioning correctly.

The ability of the proponent's LV EG system to export at the export limit is not guaranteed, but rather, it will depend upon network characteristics which change over time. The Distributor reserves the right to revise the export limit of the proponent's LV EG system if the system adversely affects the distribution network. Any augmentation cost to revise the export limit of the proponent's EG system will be borne by the proponent.

The following subsections outline the main reasons for export restrictions to the network.

5.3.1.1 Anti-Islanding

- IES systems with total capacity < 1000kVA - To ensure unintentional island does not form following an electricity distribution network outage, anti-islanding protection functions shall be implemented. Refer to Table 8 and Table 10 for detailed protection requirements.
- IES systems with total capacity ≥ 1000kVA - To ensure an unintentional island does not form following an electricity distribution network outage, larger IES systems will require reliable and immediate disconnection from the grid. Remote trip schemes or alternative NVD based anti-islanding schemes are considered to be reliable and robust and this is the Distributor's preferred option for large IES systems when ROCOF and vector shift are not considered to be reliable. Alternative schemes or export restrictions may be considered on a case-by-case basis. However, for all schemes, operation restrictions may apply, and the Distributor will not be able to guarantee the perpetuity of such schemes due to network changes over time. Refer to section 5.8.3.5 for remote trip scheme requirements and section 5.8.3.6 for NVD based anti-islanding scheme requirements. Note generation capacities >500kVA may also be subject to these additional protection requirements on a case-by-case basis.

5.3.1.2 Network Voltage

The Distributor has an obligation to maintain the network voltage in compliance to the Distribution Code. Introduction of LV EG IES to the network may impact the network voltage and push it beyond the limits of the Distribution Code. To reduce the impact on network voltage, the Distributor requires LV EG IES to operate in volt response mode. Section 5.11.1 outlines requirements for IES volt response modes. Where the volt response modes do not adequately maintain the network voltage within the Distribution Code limits, the proponent may be required to pay for network augmentation. Where the proponent does not wish to pay to augment the network an export limit may be imposed as an alternative. Note that the Distributor will not be able to guarantee the effectiveness of the voltage response modes in perpetuity for each proponent due to network changes over time.

Generators with an aggregate capacity of 1MW or greater may propose alternate voltage control strategies. The final determination on acceptable voltage control shall be made by the network.

5.3.1.3 Network Asset Constraints

Introduction of LV EG IES may result in the limits of network assets being exceeded (e.g. thermal limits etc.). This will impose a network constraint. Where the proponent does not wish to augment the network to eliminate the constraint, an export limit may be imposed as an alternative.

5.3.1.4 Emergency Backstop

Substantial levels of solar generation is connected to the wider electricity network, distributed across residential, commercial & industrial, and utility scale installations. When periods of low network demand coincide with high solar generation, there is significant risk that generation will exceed demand and cause network instability. To mitigate this risk, new, upgraded, or replaced solar generation must be capable of being remotely curtailed or interrupted. Refer to section 5.12.

5.3.2 Site Generation Limit Downstream of Connection Point

The Victorian Service and Installation Rules stipulate that LV EG electrical characteristics shall be compatible with the relevant Distributor's network. As such, the proponent shall ensure that the installation of the LV EG system does not cause the capability (e.g. thermal limits, harmonics etc.) of network assets at, or upstream of the network connection point to be exceeded.

5.4 Inverter Energy System

The IES shall comply with the following requirements:

1. IES shall be tested by an authorised testing laboratory and be certified as being compliant with AS/NZS 4777.2 with an accreditation number.
2. IES shall comprise of inverters that are registered with the CEC as approved network connected inverters
3. IES shall comprise of inverters installed in compliance with AS/NZS 4777.1

All CEC approved inverters comply with the above requirements. Please refer to the CEC website for a list of approved inverters.

5.5 Network Connection and Isolation

Network connection and isolation requirements shall be as per *AS/NZS 4777.1* and *AS/NZS 3000*. Noting that the main switch (inverter) shall be able to be secured in the open position only.

5.5.1 LV EG IES shared with multiple NMIs

For multiple occupancy buildings with a shared IES connection, the voltage and current inputs to the interface protection device shall be measured at the point of common coupling of the installation as shown in Figure 1. This shall be in accordance with the Electricity Safety Act, Electricity Safety (Installations) Regulations, Victorian Service and Installation Rules and the Inverter Power Sharing Device (IPSD) requirements in *AS/NZS 4777.1*. See section 5.8 for details on interface protection.

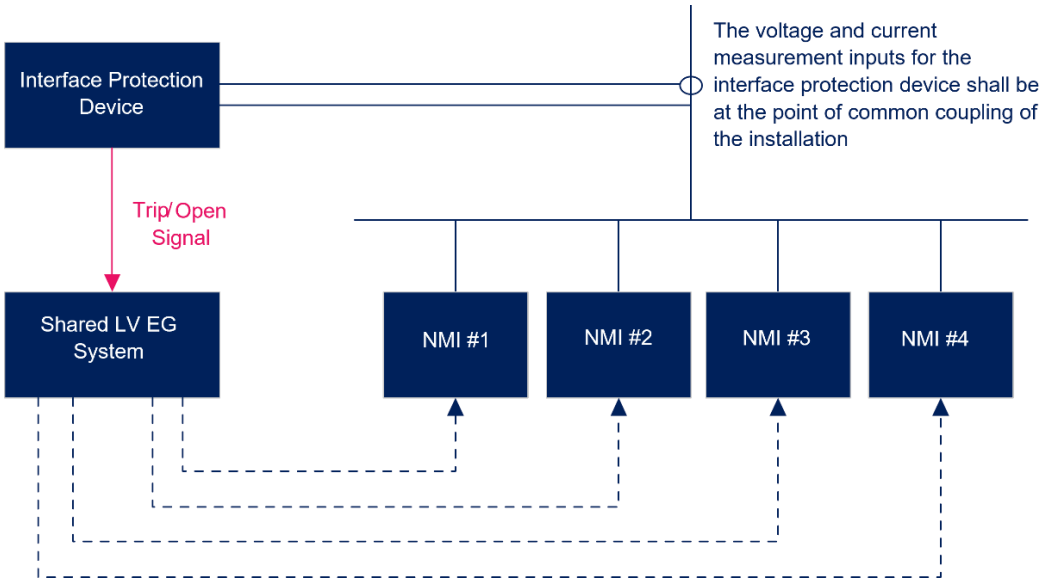

Figure 1: Shared LV EG System

5.5.2 LV EG IES Located on a Different Land Title

A safety risk may be present in the event the owner of multiple land titles sells one of the land titles to another owner and retains the PV system connection as shown in Figure 2. A PV system located on another land title may reasonably be assumed to be NOT connected to the point of supply of the neighbouring land title. This may result in a safety incident due to unintentional incorrect isolation of the PV system while electrical works are carried out in the neighbouring land title. Hence, if the owner of the multiple land title sells one of the land titles, the owner of the land title with the PV system shall apply for a unique National Meter Identifier (NMI).

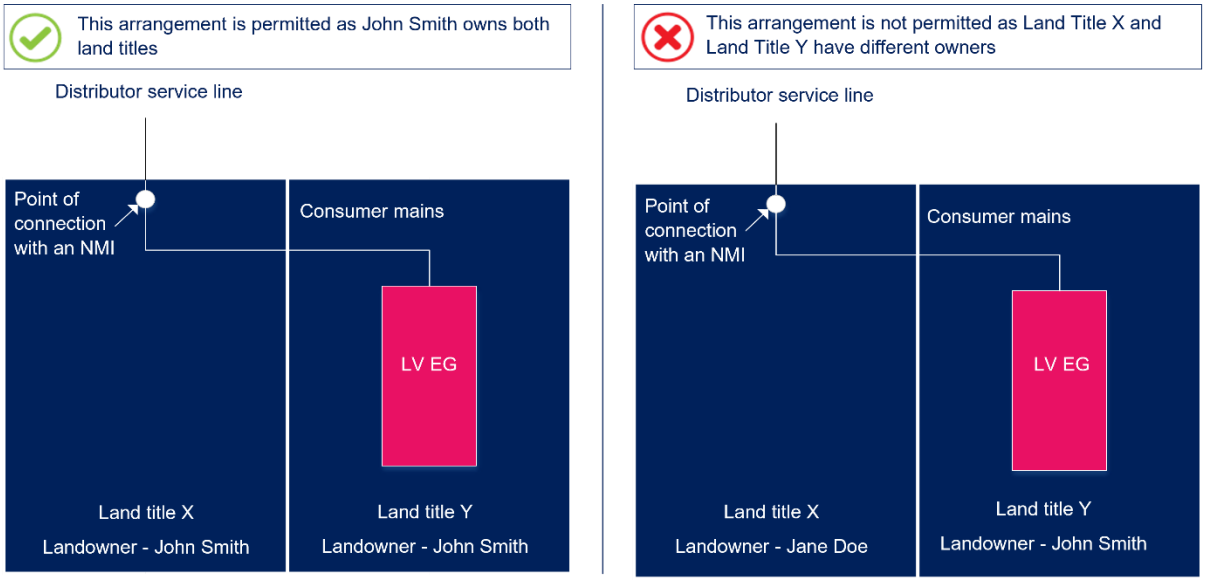

Figure 2: Multiple Land Titles

5.5.3 Electric Vehicle Reverse Power Transfer

Electric vehicle (EV) supply equipment (EVSE) that is capable of enabling reverse power transfer must be *AS/NZS 4777.2 Australia A* compliant. This shall be achieved via settings within the EVSE where the inverter is located within the EVSE, or by communications where the EVSE can communicate protection and control settings to an inverter located within the EV. If an inverter within the EV is not capable of meeting the requirements communicated by the EVSE, reverse power transfer shall be blocked. EVs shall not be connected for reverse power transfer using Mode 1 or Mode 2 EV supply equipment.

5.6 Earthing

The earthing requirements shall be:

1. For IES, earthing requirements shall be as per *AS/NZS 4777.1* and *AS/NZS 3000*
2. For ESS, shall be as per *AS/NZS 5139*, *AS/NZS 3000*, and *AS3011*.

5.7 Fault Level Contribution

The installation of an embedded generator may raise the fault level of the network to which it is connected. System fault level studies may be required to determine the increase in fault level, and to determine the works required to ensure connection of the embedded generator will not result in fault levels exceeding the levels specified in Table 7 below less a 500A headroom allocation. The design criteria for UE are based on these levels.

The customer will be required to fund the necessary fault level studies.

Table 7: VEDC Fault Level Limits

Voltage Level kV	System Fault Level MVA	Short Circuit Level kA
66	2500	21.9
22	500	13.1
11	350	18.4
6.6	250	21.9
<1	36	50.0

The Distributor will nominate the amount of short circuit fault current the customer's generator is permitted to contribute. The calculation of short circuit currents will be in accordance with the latest version of *AS 3851*. Proponents should consider series reactors as a means to limit fault level contribution. Other alternatives may be proposed to the Distributor. These will be considered on a case-by-case basis, with acceptance depending on technical suitability.

Australian Standard *AS/NZS 61439 Low Voltage Switchgear and Control Gear Assemblies* deals with the fault current withstand required for embedded generators. For all installations, switchgear shall be sufficiently rated to withstand prospective short-circuit currents.

Note: For fault level purposes, generators requiring momentary connection only will still be required to meet the same fault level requirements as permanently connected generators.

5.8 Protection

The intention of this section is to ensure the safe and reliable operation of the distribution system for operating personnel, proponents, customer (i.e. electricity consumers) and the general public. The LV EG IES intending to connect to the network shall not adversely affect the operation and safety of other existing network users. The Distributor may impose limitations and/or conditions of operation on the new LV EG IES connection in order to mitigate these issues.

The protection requirements for all IES systems shall be in accordance to *AS/NZS 4777* and as follows for each connection type.

Table 8: LV EG IES Protection Requirements

IES Protection	Three Phase Connection (≤ 200kVA aggregate rating)	Three Phase Connection (> 200kVA aggregate rating)
Inverter integrated protection according to *AS/NZS 4777.2*[1]	Yes	Yes
Interface protection	No	Yes

Note:

1. Where phase current balance protection is not incorporated as part of the inverter protection, a separate phase current balance protection device shall be installed. This function may be provided by the interface protection device.

2. Interface protection shall be installed for IPSD(s) with a connected aggregated inverter rated apparent power greater than 30kVA. The interface protection shall reference a single point that is located on the multiple electrical installation between the main switch (grid) for the multiple electrical installation and each electrical installation as part of that multiple electrical installation.

5.8.1 Overcurrent and Earth Fault Protection

The overcurrent and earth fault protection settings shall be site specific. Examples of site specific factors include circuit rating, loading, fault level, device grading, etc. Operation of overcurrent/earth fault protection shall immediately trip a suitably fault rated circuit breaker.

5.8.2 Inverter Integrated Protection

AS/NZS 4777.2 Australia A inverter protection settings for LV EG IES connections are tabulated below. *AS/NZS 4777.2 Australia A* settings are recommended. Please note that the proponent is responsible for ensuring that these settings are suitable for their application. Where there is a need to deviate from the settings below, this shall be negotiated with the Distributor as part of the application.

Table 9: Australia A Inverter Integrated Protection Settings

Protection Function	Setting	Trip delay time	Maximum disconnection time
Under voltage 1 (V <)	180V	10s	11s
Under voltage 2 (V<<)	70V	1s	2s
Sustained over voltage (based on average value over a period of 10min)	258V	-	3s
Over voltage 1 (V>)	265V	1s	2s
Over voltage 2 (V>>)	275V	-	0.2s
Under frequency	47Hz	1s	2s
Over frequency	52Hz	-	0.2s
Phase Balance Protection	21.7A between phases	-	15s
Minimum reconnection delay following a protection trip		60 seconds	

Notes:

1. Activation of protection settings will need to comply with Clause 4.9 of *AS/NZS 4777.2*.
2. Inverters shall comply to the cease power generation characteristics in clause 4.5.4.1 of *AS/NZS 4777.2*.
3. Active anti-islanding protection shall be as per *AS/NZS 4777.2*.

5.8.3 Interface Protection

Interface protection requirements of *AS/NZS 4777.1* shall apply to LV EG IES connections as per Table 10. The interface protection functions for each LV EG IES connection subcategory are shown in Table 11.

Table 10: Interface Protection Requirements

Protection Function	Exporting	Non-exporting
Network reverse power protection	-	-
IES circuit phase balance protection	-	-
Overcurrent and earth fault protection	-	-
Passive anti-islanding protection	✔	✔
Remote tripping	-	-
Symbols are used to denote protection requirements, where: ✔ Represents that the protection shall be required – Represents that the protection may be required × Represents that the protection shall not be required		

The interface protection device shall be compliant with *IEC 60255*.

The interface protection device shall implement various protection schemes and be designed such that:

- Voltage sensing shall be located as close to the main Incomer Circuit Breaker as practicable
- All protection elements initiate tripping of a suitably rated circuit breaker (tripping of CB isolates the IES); or
- Current-based protection elements (e.g. overcurrent, earth fault) initiate tripping of a suitably rated circuit breaker while voltage-based protection elements (e.g. over voltage, under voltage, over frequency, under frequency) initiate opening of a suitably rated contactor.

For voltage-based protection elements, if the trip/open signal is not hard wired to the disconnection device (i.e. circuit breaker or contactor), a dedicated wireless trip scheme may be used. The trip/open signal shall be initiated by a protection grade device (*IEC 60255* compliant). The input and output devices used to transmit and receive the trip/open signal shall be fit for purpose and compliant to *AS/NZS IEC 60947* or equivalent. The receipt of the trip/open signal shall operate the disconnection device directly. This is illustrated in Figure 3 below:

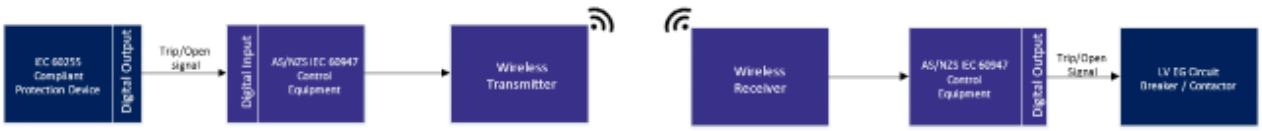

Figure 3: Typical Wireless Base Protection Trip Scheme

The protection scheme shall be fail-safe such that in the event of any component failure (e.g. device fault, wiring fault, loss of aux supply, circuit breaker failure, wireless trip communications, etc.), the LV EG IES shall be automatically disconnected from the network within 2s.

End to end supervision of the wireless communication shall be enabled and failure of the wireless communication shall disconnect the LV EG IES in less than the auto reclose dead time of the upstream feeder CB or ACR. The time delay for the supervision function shall be negotiated as part of the application.

5.8.3.1 Network Reverse Power Protection

Reverse power protection is configured to look towards the network. The setting shall be set as per agreement with the Distributor and use a maximum trip delay of 2s. Delays of greater than 2s shall be negotiated with the Distributor.

5.8.3.2 Phase Balance Protection

Where phase balance protection is not incorporated as part of the inverter protection, this may be implemented via the interface protection relay. The current unbalance between phases at the LV EG IES connection point caused by a LV EG IES (or multiple IES) shall not exceed 21.7A (5kVA at 230V) and shall disconnect all IES by automatic operation of a disconnection device within a maximum of 30s if this limit is exceeded.

For multiple IES installations with single-phase inverters, the difference between the aggregate single-phase inverter apparent power ratings on each phase shall differ by no more than 10% of the multiple-phase aggregate IES apparent power rating.

5.8.3.3 Passive Anti-Islanding Protection

Voltage measurement for anti-islanding protection implemented within the interface protection device shall be located upstream of both the LV EG connection and any power quality improvement devices (i.e. active filters etc.). The passive anti-islanding protection shall be as per Table 11. Active anti-islanding protection shall be as per *AS/NZS 4777.2*.

Table 11: Passive Anti-Islanding Protection

Protection Function	Setting	Trip delay time
Under voltage 1 (V <)	179V	11.5s
Under voltage 2 (V<<)	69V	2.5s
Sustained over voltage (based on average value over a period of 10min)	258V	-
Over voltage 1 (V>)	267V	2.5s
Over voltage 2 (V>>)	277V	0.2s
Under frequency	47Hz	2.5s
Over frequency	52Hz	1s

Notes:

1. ROCOF settings are required to be set according to the limitations of the inverters. Inverters shall maintain continuous operation for ROCOF that does not exceed 4Hz/s for a duration of 0.25s. Therefore, the proposed ROCOF setting for the Interface Protection device is required to be outside these boundaries and also set within safety limitations of the equipment (e.g. 4Hz/s, t= 0.5s).
2. Vector Shift is not required on the interface protection device for IES installations. If vector shift protection is used, inverters shall remain in continuous operation for a single phase vector shift of 60º and three phase vector shift of 20º.

5.8.3.4 Reconnection Time Delay

The interface protection device is required to have a reconnection time delay of greater than 60s. In other words, once the protection has operated and tripped the main circuit breaker or contactor, the network parameters must be within the limits set out in Section 5.8.3.3 for at least 60s before the LV EG IES can reconnect with the network.

5.8.3.5 Remote Trip Scheme

The purpose of the remote trip scheme is to immediately and automatically transmit a trip command to the proponent's LV EG CB in response to a network protection trip resulting in the loss of the relevant distribution HV feeder. Figure 4 below illustrates a typical remote trip scheme.

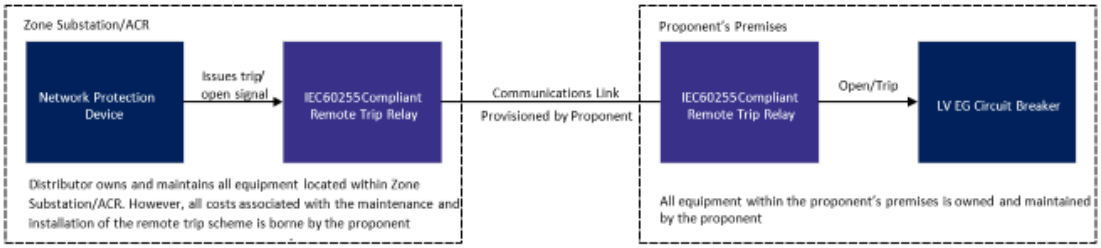

Figure 4: Typical Remote Trip Scheme

The minimum requirements for the remote trip scheme are as follows:

- Send a remote trip signal to the proponent's LV EG CB for any relevant distribution protection operation, "loss of mains" network scenarios on the HV supply feeder including overcurrent, earth fault and sensitive earth fault protection.
- Control Centre operators shall have the facility to trip the proponent's LV EG CB via SCADA and this trip shall be latched until it is reset by the Control Centre operator.
- Send a remote trip signal to the proponent's LV EG CB for any manual initiated CB open command on the HV supply feeder (either via Distribution operator on site at the supply zone substation or controller in the Control Centre).
- Tripping of the proponent's LV EG CB shall be completed within a maximum of 200ms from the time of the Distribution protection operation or manually initiated command.
- The scheme shall be configured so that the proponent's LV EG CB is automatically tripped in the event the integrity of the scheme is compromised, including equipment failure associated with the scheme. The proponent LV EG CB shall trip if the integrity of the scheme is not restored (e.g. equipment failure, loss of auxiliary supply) within 2s to ensure the scheme is fail safe.
- End to end supervision of the communication shall be enabled and failure of the connection shall disconnect the HV EG in less than the auto-reclose dead time of the upstream isolation device. The time delay for the supervision function shall be negotiated.
- At a minimum the following information shall be telemetered to the Control Centre via SCADA for each proponent's remote trip scheme:
  - Equipment fail alarm for both ends
  - Health of communications link
  - Remote trip received by proponent
  - Proponent LV EG CB fail to open (after receipt of remote trip signal)
  - Proponent LV EG CB status (open/closed)
  - Loss of mains (loss of network) protection operated
  - Proponent generation (kW) with measurement accuracy within ±2%
  - Proponent reactive power output (kvar) with measurement accuracy within ±2%
  - Proponent net load (kW) with measurement accuracy within ±2%
  - Proponent net reactive power consumption (kvar) with measurement accuracy within ±2%
  - Additional voltage, current or power quality parameters such as harmonics, flicker, voltage dips and swells may be required. These will be negotiated as part of the application process.

5.8.3.6 NVD Based Anti-Islanding Scheme

Refer to NVD Based Anti-Islanding Scheme. (UE-ST-5003)

5.8.3.7 Special Operational Conditions

The following LV EG protection is required for special network operational conditions:

- **Live line work by Distributor**

When works are undertaken near or on live HV distribution feeders, the Distributor enables a live line operating mode which disables automatic reclose and enables low set instantaneous overcurrent and earth fault protection. With live line mode enabled, grading may be compromised with downstream protection. As such, additional requirements may be required and shall be negotiated with the Distributor as part of the application.

- **Total Fire Ban (TFB) Days**

For LV EG installed in areas that may experience TFB restrictions, if the proponent chooses to operate their LV EG on TFB days, the LV EG will be required to disconnect instantaneously to avoid contribution to a fault. As such, additional requirements may be required and shall be negotiated with the Distributor as part of the application.

5.8.4 Switchgear and control gear requirements

The switchgear and control gear associated with the LV EG IES connection shall be:

- Switchgear and Control gear - be fit for purpose and compliant with either AS or international standards (such as *IEC 60947*, *UL 508*, etc.).
- Switchgear - appropriate breaking and thermal capacities based on the fault level at the switchgear location. Refer to Table 7 for the maximum LV fault level. Site specific fault level at transformer LV terminals can be obtained from the Distributor.
- LV EG isolation – All LV EG shall have a lockable LV EG isolating device owned and operable by the proponent.

5.8.5 Interlocking

The interaction, interlocking and safe operation of different types of generation downstream of the point of connection shall be the responsibility of the Proponent.

5.9 Operating Voltage and Frequency

The operating voltage and frequency range requirements can be found in Table 11. Sustained operation for frequency variations and voltage disturbance withstand characteristics of the inverter will be in accordance with Clause 4.5.3 of *AS/NZS 4777.2*. Voltage rise requirement is as per Appendix B of *AS/NZS 4777.1* and is to be calculated at the point of supply. Figure 5 shows the application of the voltage rise requirements for a typical LV EG IES installation.

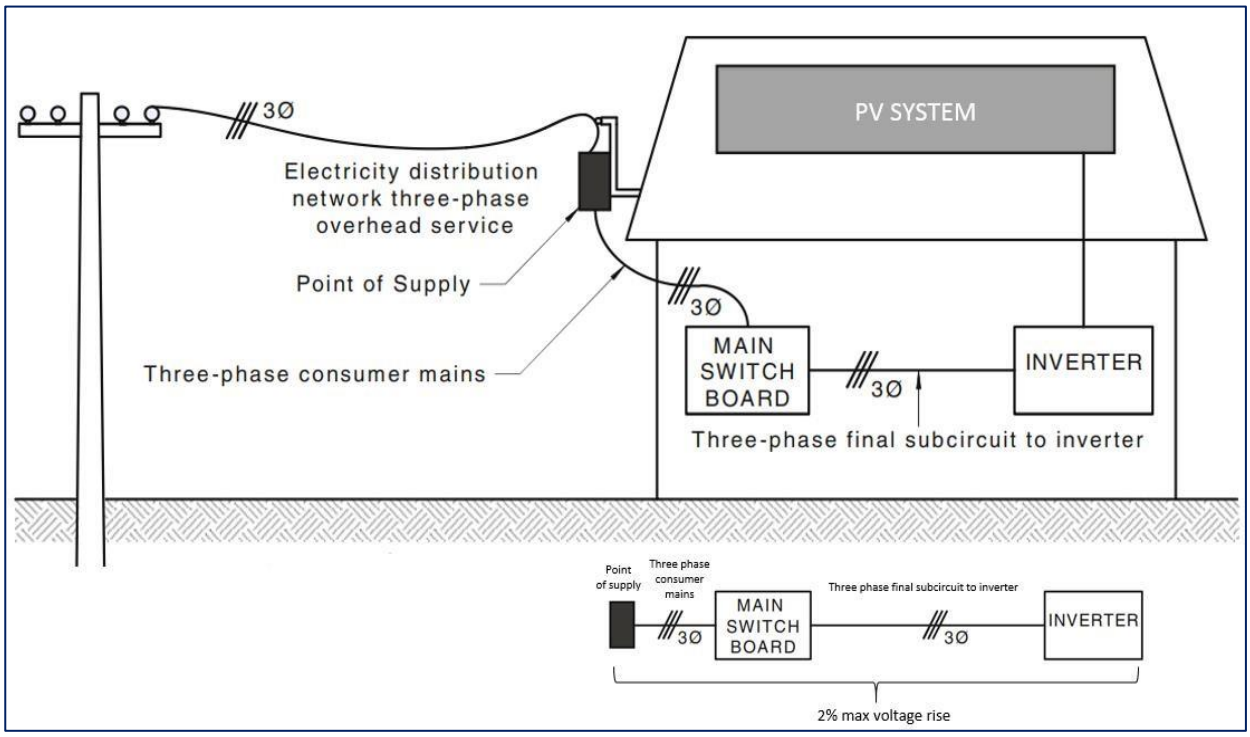

Figure 5: Application of Voltage Rise Requirements for a Typical LV EG IES Installation

5.10 Metering

Metering shall be installed as per *Victorian Service and Installation Rules*.

5.11 Power Quality

LV EG IES shall comply with the applicable power quality requirements of the *AS/NZS 61000* series as well as relevant Victorian regulations and licence conditions, including but not limited to:

- Network voltage control
- Voltage fluctuations
- Harmonics
- Voltage balance

5.11.1 IES Volt Response Modes

Inverters have power quality response capability to either maintain the power quality at the point of connection or provide support to the network. Inverters operating as LV EGs may be required to have volt response modes (volt-watt and/or volt-var response modes) enabled. This enables the inverter to respond to voltage changes at the inverter terminals without adversely affecting the voltage within an electrical installation. Where voltage response modes are not required, the inverters shall operate at a power factor agreed with the Distributor.

Table 12: Australia A Volt-watt Response Maximum Set Point Values

Reference	Volt reference value	P_{output}/P_{rated}
V_{W1}	253	100%
V_{W2}	260	20%

5.11.1.1 Volt-var response mode

The volt-var response mode varies the reactive power output of the inverter in response to the voltage at its network side terminals. The recommended response curve for the volt-var response mode is defined by the volt response reference values and corresponding var levels as defined in *AS/NZS 4777.2* under Australia A region settings. A summary is provided in Table 13. Based on the network connection point, these settings will be negotiated as part of the application process.

Table 13: Volt-var Response Set Point Values

Reference	Volt reference value	VAr_{output}/VA_{rated}
V_{V1}	207	44% lead
V_{V2}	220	0%
V_{V3}	240	0%
V_{V4}	258	60% lag

Leading % VAr / VA level represents the inverter providing Vars to the grid whereas the lagging % VAr / VA level represents the inverter sinking Vars from the network.

5.11.1.2 Energy Storage Charging Response Mode

Where an inverter is connected to an ESS, the inverter shall vary the power imported from the network to charge the energy storage device based on the voltage at its network side terminals. The Distributor's recommended response curve for this response mode is defined by the volt response reference values and corresponding power levels as defined in *AS/NZS 4777.2 Australia A* region settings. A summary is provided in Table 14. Based on the network connection point, these settings will be negotiated as part of the application process.

Table 14: Energy Storage Charging Response Mode (230V Base Voltage)

Reference	Volt reference value	P_{import}/P_{rated}
$V_{W1\text{-}ch}$	207	20%
$V_{W2\text{-}ch}$	215	100%

5.11.2 Power Factor Control

Volt-var response modes of the inverter system is utilised to reduce overvoltage conditions on the LV distribution network. However, this will typically counter act the operation of power factor correction devices (e.g. capacitor banks) and hence measures shall be taken to disconnect these power factor correction devices at V_{V3} setting of the volt-var response mode, which is typically ≥ 240V. See Section 5.11.1.1 for details on volt-var response mode.

5.11.3 Network Ancillary Services

AEMO is responsible for maintaining the network frequency close to 50Hz in accordance with the NEM frequency standards and for keeping the voltage within an acceptable range at particular nodes on the transmission network and for scheduling power flow between regions while maintaining power flows within the capability of plant. AEMO achieves these objectives by dispatching scheduled generation to match the load and via ancillary services.

Ancillary services can be one of the following:

- Frequency Control Ancillary Services (FCAS).
- Network Control Ancillary Services (NCAS).
- System Restart Ancillary Services (SRAS).

In practice FCAS and NCAS are offered by LV EGs by providing either real power or reactive power reserves that may be required in response to a network fluctuation, disturbance or event or based on load flows to provide local network support. Any LV EG has the option to provide ancillary services.

LV EG participating in network ancillary services (potentially IES with ESS) has the potential to rapidly change network load, resulting in significant voltage impact on the local network. Hence, the LV EG shall adopt necessary controls to prevent adverse impacts on the power quality at the point of connection while generating to provide ancillary services. Proponents intending to participate in ancillary services shall inform the Distributor in their application, or as soon as possible after application.

5.12 Emergency Backstop Controls

To address network risks associated with network minimum demand events, the Victorian Government has legislated the requirement for all new, upgrading, and replacing solar systems to be capable of being remotely curtailed or switched off during an emergency minimum system load event. For more information, refer to: Victoria's Emergency Backstop Mechanism for rooftop solar | Engage Victoria. To comply to the government mandate and to future proof the network, United Energy requires all new and upgraded solar Inverter Energy Systems of capacity greater than 200kVA be capable of receiving and adhering to backstop control signals.

United Energy has the obligation to ensure that connected solar photovoltaic generating units are capable of being remotely curtailed or interrupted under direction from AEMO. The emergency backstop control capability is provided using either Generation Monitoring Meters (GMM) (refer to section 12) or by CSIP-AUS internet-based communication (refer to section 5.12.1). The proponent may negotiate their preferred backstop solution, which will be agreed depending on technical feasibility. Only one remote backstop method may be used per site.

Legacy solar generation installed prior to the 1st of October 2024 does not need to be backstop enabled unless it is being altered. If it is altered, the system must comply with remote backstop requirements. If new solar generation is installed in addition to legacy solar generation without altering the legacy solar generation, then only the new installation is required to be backstop enabled.

For the avoidance of doubt, hybrid inverters are required to be backstop enabled when connected to photovoltaic panels. Inverters that only have a battery system or electric vehicle port are not required to be backstop enabled.

Additional backstop requirements for embedded networks are detailed in section 5.13.2 below.

5.12.1 CSIP-AUS Communication Requirements

The following communications requirements apply for solar photovoltaic connections that are emergency backstop enabled via the CSIP-AUS protocol. The Distributor requires the EG connection to establish communication and undertake commissioning with the Distributor's utility server. Communication between the IES and the Distributor shall be established using the CSIP-AUS standard

The CSIP-AUS commands utilised under the emergency backstop control are:

1. Export limit – where the inverter is required to ensure that the amount of energy exported to the grid, measured at the connection point, is constrained.
2. Generation Limit – where the inverter is required to ensure that the amount of energy generated by the inverter, measured at the inverter output, is constrained.
3. De-energise – where the inverter is required to turn off and not produce any energy.

The Distributor's server shall be in constant communication with the IES providing generation or export limits. A low static export limit (as per Table 1) shall be automatically applied upon communication failure between the IES and the Distributor's server. A communication failure shall result in the inverter activating the fail-safe low static export limit.

The IES shall respond and operate to control signals sent from the Distributor as part of the minimum demand backstop function.

This may be achieved by:

1. Installing *IEEE 2030.5 CSIP-AUS* compliant inverters with a client which can directly communicate back to the utility server via the internet;
2. Installing *IEEE 2030.5 CSIP-AUS* compliant inverters via a gateway device that can directly communicate between the Distributor's utility server and the inverters; or
3. Installing *IEEE 2030.5 CSIP-AUS* compliant inverters and/or gateway device and establishing an aggregator communication connection that can interface between the Distributor's utility server and the gateway device and/or inverters.

Refer to our website for details of equipment that complies to the above requirements.

5.12.1.1 Installation Requirements

To support the communications and control functionality, the IES installation shall:

1. Be connected to the internet and able to communicate to the Distributor's utility server – this process will be described in the manufacturer(s) documentation.
2. Have an export meter installed to monitor the power flow at the connection point. The export meter shall connect to the inverter and/or gateway device providing it with the ability to accurately manage export limits.
3. The device must be tested and commissioned including capability testing in line with section 6.1 emergency backstop commissioning.

5.13 LV Embedded Networks with Embedded LV EG

A LV embedded network operator is exclusively responsible for the management of the embedded network including any LV EG within the embedded network. United Energy does not have a direct relationship with the LV EG and/or the proponent in this case. Hence, the LV embedded network operator shall make available all necessary documentation to demonstrate compliance to this document and other applicable standards and regulations.

5.13.1 Interface Protection for Embedded Networks

Due to the nature of distributed embedded networks, implementation of interface protection to trip all installed EG may be particularly onerous. Interface protection will be required based on the building or structure to which generation is connected, rather than to the embedded network point of connection. Requirements shall be as per table 15. Interface protection may be required on multiple buildings and generation installations.

Table 15: Embedded Network Interface Protection Requirements

Combined inverter rating on one building or structure	Interface protection required?
>200 kVA	Yes
≤200 kVA	No

5.13.2 Remote Backstop for Embedded Networks

Embedded networks have additional remote backstop requirements that differ from normal installations due to the additional complexities of managing distributed generation against a single point of connection. Backstop may be achieved through either CSIP-AUS or GMM solutions. However, only one solution may be used per embedded network.

5.13.2.1 Greenfield Sites

For new sites, the preferred solution is for the embedded network operator (ENO) to manage a CSIP-AUS enabled site generation control system that is capable of communicating with all solar photovoltaic systems within the embedded network. A site export meter shall be installed at the point of connection to enable the site generation to be ramped down to 0kW.

If distributed solar cannot practically connect to a generation control system, the ENO may elect for solar systems less than or equal to 30kVA to be export limited to 0kW at the child NMI, building or structure to which they are connected. All solar systems greater than 30kVA, must be backstop enabled.

5.13.2.2 Brownfield Sites

Where one or more new solar generation systems are being installed, the preferred solution is for the ENO to manage a CSIP-AUS enabled site generation control system that is capable of communicating with all new solar photovoltaic systems within the embedded network. A site export meter shall be installed at the point of connection to enable the newly connected generation to be ramped down to 0kW.

If distributed solar cannot practically connect to a generation control system, the ENO may elect for solar systems less than or equal to 30kVA to be export limited to 0kW at the child NMI, building or structure to which they are connected. All non-legacy solar systems greater than 30kVA, must be backstop enabled.

Legacy solar systems will be backstop exempt until the point at which they are replaced, altered, or augmented.

5.14 Communications Requirements for Monitoring Systems

For LV EG IES systems requiring remote trip schemes, the communication requirements are outlined in Section 5.8.3.5.

Communication requirements for alternate control schemes as mentioned in Section 5.8.3.6 shall be negotiated as part of the application process.

Proponents shall also install remote monitoring of their LV EG IES systems to ensure that the proponent is promptly notified of issues on their LV EG IES systems. Remote monitoring of LV EG IES systems by the proponent may be achieved via use of IES manufacturer's software applications.

A generator monitor may be required for systems larger than 200kVA. This monitor will provide remote monitoring capability as well as the ability to trip generation if required by AEMO. Refer to section 12 for details.

5.15 Data and Information

5.15.1 Static Data and Information

The static data and information shall be provided by the proponent as listed in Appendix E: Static Data and Information. The Distributor will provide this data to AEMO's Distributed Energy Resource Register (DERR) on behalf of the proponent.

5.15.2 Dynamic Data and Information

For LV EG IES systems requiring remote trip schemes, the dynamic data requirements are outlined in section 5.8.3.5. Dynamic data requirements for LV EG IES systems implementing alternate control schemes as mentioned in Section 5.8.3.6. shall be negotiated as part of the application process.

5.16 Cybersecurity

All devices and equipment settings associated with the LV EG system shall be secured against inadvertent or unauthorised tampering. Changes to the LV EG settings shall require the use of tools (e.g. special interface devices and passwords) and special instructions which shall not be provided to unauthorised personnel.

5.17 Technical Studies

Technical studies shall be completed as part of the connection application as per Table 16 below:

Table 16: Technical Studies Required for LV EG IES Connections

Technical Studies	LV IES ≤1000kVA	LV IES >1MVA
Voltage Rise Calculations	✓	✓
Voltage Study	-	✓
Power Flow Study	-	✓
Fault Level Contribution Study	✓	✓
Preliminary Impact Assessment	-	✓
Protection Setting Report	✓	✓
Power Quality Impact Study	-	✓
Full Impact Assessment	-	-

Symbols are used to denote technical studies requirements, where:

✓ Represents that technical studies shall be required

– Represents that technical studies may be required

As part of the application process, the Distributor will provide the following network data upon request to enable the proponent to complete the required technical studies:

- network fault levels up to the point of common coupling
- network protection information for distribution assets (e.g. protection settings)
- network equipment information for distribution assets (e.g. line and conductor ratings)

Where one or more of the technical studies does not meet the assessment criteria, the Distributor shall provide the proponent feedback on components of the submission that require further work. The proponent has the option to discuss with the Distributor:

- Alternative configurations of the LV EG IES systems
- Network augmentation (and associated cost of network augmentation)

5.17.1 Voltage Rise Calculations

Voltage rise calculations shall be as per *AS4777.1*. Voltage, Power Flow, and Power Quality Impact Studies may be required depending on the IES system size and location.

5.17.2 Fault Level and Protection Settings Report

A comprehensive protection study may be requested for certain installations. Where this is required, the fault level contribution and protection settings shall be included in this study.

Where a comprehensive protection study is not required, the protection settings can be provided on either the Single Line Diagram or Protection Schematic.

6. Testing and Commissioning for LV EG IES

Testing and commissioning of the LV EG IES installation shall be undertaken by the proponent in accordance with *AS/NZS 4777.1* (where applicable), *AS/NZS 3000*, *AS/NZS 5033*, the CEC approved test regime, the equipment manufacturer's specifications, and to the technical requirements stipulated in this document, in order to demonstrate that the installed LV EG IES system meets the requirements of the connection agreement.

Note these tests shall be installation tests and not type tests of the equipment. Equipment type tests shall be as per *IEC 62116*. All CEC approved inverters are typed tested to *IEC 62116*.

In addition, the following requirements for network connection of LV EG IES systems shall be met:

1. A testing and commissioning plan shall be produced by the proponent. At a minimum, the plan shall cover all the requirements outlined in the LV IES Commissioning Form (see Appendix E: Static Data and Information). Table 17 below details the required test reports and documentations to be submitted. This plan shall be prepared before any testing and commissioning work commences.
2. The results of all testing and commissioning activities (per the plan) shall be thoroughly documented
3. Testing and commissioning acceptance shall be signed off by a suitably qualified and authorised person
4. Testing and commissioning acceptance may require the Distributor to carry out witnessing at the proponent's expense

Table 17: Testing and Commissioning Requirements for LV EG IES Connections

Testing and commissioning submission	LV EG IES
	>200kVA
Protection settings and performance[1]	✓
Power quality settings and performance	✓
Export limits settings and performance	✓
Communications performance for monitoring system[2]	✓
Shutdown Procedures	–
Confirmation that a site operation procedure and maintenance plan is available to the proponent	✓
Confirm system is as per specifications	✓
Confirm SLD is located on site	✓
As-built documentation and drawings	✓
Certificate of Electrical Safety (CES)	✓
UE LV EG Commissioning Form (see Appendix D: Static Data and Information)	✓
Symbols are used to denote testing and commissioning requirements, where: ✓ Represents that testing and commissioning shall be required – Represents that testing and commissioning may be required	

Notes:

1. Protection Settings and Performance

   The LV EG IES interface protection relay shall be tested by secondary injection. All necessary functional tests shall be carried out to prove that the protection and control schemes operate as per the design. Over- and under-voltage protection shall be tested for each phase.
2. Communications performance for monitoring system

   Where remote tripping or NVD based protection scheme is required, full end-to-end testing of scheme is required.

6.1 Emergency Backstop CSIP-AUS Registration, Commissioning and Capability Testing

For CSIP-Aus emergency backstop control connection capability tests are required to completed as part of IES installation and commissioning. To facilitate the emergency backstop capability testing, the proponent shall ensure that the IES is connected to the internet and configured in the IES manufacture's systems ready for registration with United Energy. Refer to the relevant manufacturer information for details on configuring IES in their systems.

The device registration, commissioning and capability testing process is performed as part of the negotiated connection process.

Once the commissioning and capability testing has been completed, and a COES has been obtained, the installer shall submit all commissioning documents to embeddedgeneration@ue.com.au, after which the sanction to connect will be issued.

7. Operations and Maintenance

The operation and maintenance requirements for LV EG IES connections to the network, includes:

1. The LV EG IES system shall be operated and maintained by the proponent to ensure compliance with their connection agreement and all legislation, codes, and/or other regulatory instruments at all times.
2. As a function of the routine maintenance checks, a record of inspection activities undertaken at the site demonstrating that the installation has been tested and is safe to remain connected to the network is required. Record of inspections shall be retained by the customer and made available to the Distributor upon request.

The following documentation is to be kept at the LV EG IES installation in compliance with relevant codes and is to be readily accessible by the Distributor's representatives and other authorised parties:

- A single line diagram showing all electrical metering points, protection functions and zones of coverage.
- A record of all approved protection settings.
- A copy of the approved operating procedures.
- Maintenance plan and all subsequent maintenance records.

In addition, the proponent shall:

1. Maintain and operate the LV EG IES installation in a safe condition.
2. Ensure that any changes to the LV EG IES installation are performed by an electrician lawfully permitted to do the work and that the proponent holds a Certificate of Electrical Safety (COES) issued in respect of any of the changes.
3. Seek Distributor approval prior to altering the connection in terms of an addition, upgrade, extension, expansion, augmentation or any other kind of alteration, including any changes to firmware and protection functions or settings.

If any breach of this technical standard is suspected, the Distributor may undertake an investigation. If the investigation reveals a breach, the proponent shall be required to rectify this breach and pay the Distributor for the costs associated with the investigation and associated works undertaken.

Part B – Non-IES Requirements

8. Technical Requirements for LV Non-IES EG

This section details the technical requirements for LV non-IES EG connections.

8.1 Labelling and Signage

The labels and signs on the installation, including cables, shall be as per *AS/NZS 3000:2018*. Site specific labelling for additional energy sources and operating procedure for the energy sources shall be installed at each isolation point that has a possibility of energy feedback from the LV non-IES EG.

8.2 Maximum System Capacity

Refer to Table 2 for details of maximum system capacity.

8.3 Generation Control

8.3.1 Export Constraints at Connection Point

The maximum export limit of LV non-IES EG connections is as per Table 2 and is generally less than 2MVA.

The export constraints, where required, will be negotiated with the proponent as part of the application process.

The ability of the proponent's LV EG system to export is not guaranteed, but rather, it will depend upon network characteristics which change over time. The Distributor reserves the right to revise the export constraints of the proponent's LV EG system if the system adversely affects the network safety and/or performance.

The following subsections outlines possible reasons for export or minimum import restrictions to the network.

8.3.1.1 Anti-Islanding

- LV non-IES EG systems with total capacity < 1000kVA - To ensure an unintentional island does not form following an electricity distribution network outage, LV non-IES EG shall incorporate anti-islanding protection functions such as ROCOF, vector shift, etc. to reliably and automatically disconnect from the network. Refer to Table 19 and Table 23 for detailed protection requirements. If there is insufficient load on the network to implement a reliable ROCOF and vector shift setting, minimum import may be considered, or alternatively a remote trip scheme may be required.
- LV non-IES EG systems with total capacity ≥ 1000kVA - To ensure an unintentional island does not form following an electricity distribution network outage, LV non-IES EG systems will require reliable and immediate disconnection from the network. Reliable schemes such as a remote trip scheme between the network and the LV non-IES EG may need to be installed. If a remote trip scheme is required, it will be determined during the technical studies. Alternatively, minimum import depending on the connection point will avoid the requirement for such schemes. Refer to Section 8.7.2.3 for remote trip scheme requirements.

8.3.1.2 Network Voltage

The Distributor has an obligation to maintain the network voltage in compliance to the Distribution Code. Introduction of LV non-IES EG to the network may impact the network voltage and push it beyond the limits of the Distribution Code. To reduce the impact on network voltage, all LV non-IES EG is required to enable voltage response modes as per Section 8.12.1. Where the voltage response modes do not adequately maintain the network voltage within the Distribution Code limits, the proponent may be required to pay for network augmentation. Where the proponent does not wish to pay to augment the network an export limit may be imposed as an alternative. Note that the Distributor will not be able to guarantee the effectiveness of the voltage response modes in perpetuity for each proponent due to network changes over time.

8.3.1.3 Network Asset Constraints

Introduction of LV EG IES may result in the limits of network assets being exceeded (e.g. thermal limits etc.). Where the proponent does not wish to augment the network an export limit may be imposed as an alternative.

8.3.1.4 Site Generation Limit Downstream of Connection Point

The Victorian Service and Installation Rules stipulate that LV EG electrical characteristics shall be compatible with the relevant Distributor's network. As such, the proponent shall ensure that the installation of the LV EG system does not cause the capability (e.g. thermal limits, harmonics, etc.) of network assets at, or upstream of the network connection point to be exceeded.

8.4 Network Connection and Isolation

Network connection and isolation requirements shall be as per *AS/NZS 3000*.

8.4.1 LV Non-IES EG Located on a Different Land Title

A safety risk may be present in the event the owner of multiple land titles sells one of the land titles to another owner and retains the LV EG system connection as shown in Figure 6. A LV EG system located on another land title may reasonably be assumed to be NOT connected to the point of supply of the neighbouring land title. This may result in a safety incident due to unintentional incorrect isolation of the LV EG system while electrical works are carried out in the neighbouring land title. Hence, if the owner of the multiple land titles sells one of the land titles, the owner of the land title with the LV EG system shall apply for a unique National Meter Identifier (NMI).



Figure 6: Multiple Land Titles Under the Same Owner

8.5 Earthing

The earthing requirements for the LV non-IES EG system shall be in accordance with *AS/NZS 3000* and *AS/NZS 3010*. The earthing system for the LV non-IES EG system must provide satisfactory earthing independent of the existing site earthing system.

LV non-IES EG can contribute to network phase to ground fault levels. Hence, a review of its earth grid design and associated protection is required to ensure safety criteria (i.e. safe potential step and touch voltages) are not exceeded. Potential step and touch voltages are correlated with protection fault clearing time.

If a LV non-IES EG is designed to operate in island mode to supply a local load at the same premise (i.e. a backup electrical supply in the event of a loss of supply from the network), it shall have a local earthing system that can provide satisfactory earthing without relying on the Distributor's earthing system. This is necessary because during a network supply outage, the neutral and or the MEN connection of the distribution network may be disconnected. An example of this is illustrated in Figure below.

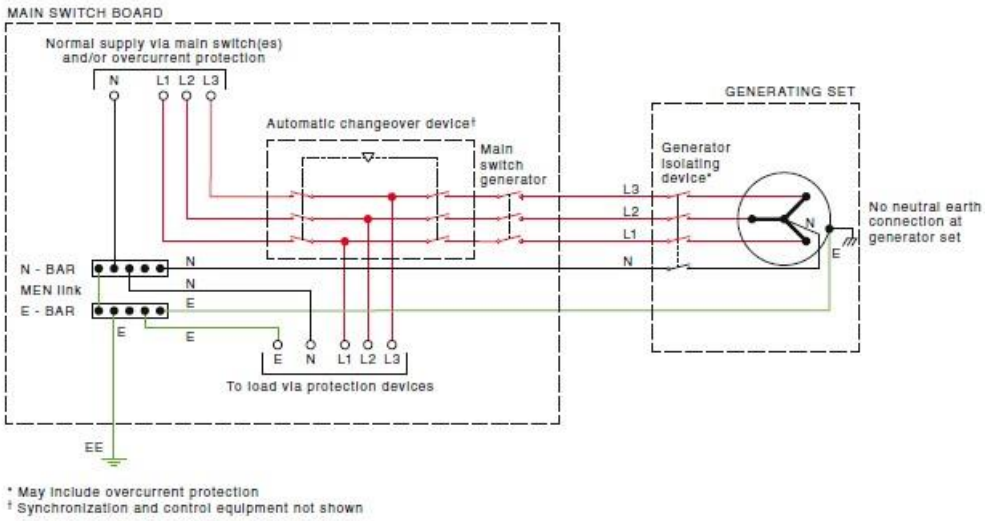

Figure 7: Example of Earthing Configuration

The LV non-IES EG neutral (i.e. star connected three phase winding) shall be earthed. The LV non-IES EG neutral(s) shall be bonded to earth at a single point – the multiple earth neutral point. ATS or MTS changeover shall not switch the incoming neutral to the MEN switchboard (as illustrated above).

For detailed earthing configurations for LV non-IES EG please refer to *AS3000* section 7.3.8.

8.6 Fault Level Contribution

The installation of an embedded generator may raise the fault level of the network to which it is connected. System fault level studies may be required to determine the increase in fault level, and to determine the works required to ensure connection of the embedded generator will not result in fault levels exceeding the levels specified in Table 18 below less 500A headroom. The design criteria for UE are based on these levels.

The customer will be required to fund the necessary fault level studies.

Table 18: VEDC Fault Level Limits

Voltage Level kV	System Fault Level MVA	Short Circuit Level kA
66	2500	21.9
22	500	13.1
11	350	18.4
6.6	250	21.9
<1	36	50.0

The Distributor will nominate the amount of short circuit fault current the customer's generator is permitted to contribute. The calculation of short circuit currents will be in accordance with the latest version of Australian Standard *AS 3851*. Proponents should consider series reactors or the use of inverters as a means to limit fault level contribution. Other alternatives would need to be submitted to the Distributor in order to ensure they are acceptable.

Australian Standard *AS/NZS 61439.1 Low Voltage Switchgear and Control Gear Assemblies* deals with the fault current withstand required for embedded generators. For all installations, switchgear shall be sufficiently rated to withstand prospective short-circuit currents.

Note: For fault level purposes, generators requiring momentary connection only will still be required to meet the same fault level requirements as permanently connected generators.

8.7 Protection

The intention of this section is to ensure the safe and reliable operation of the distribution network for operating personnel, proponents, and the general public. The LV non-IES EG intending to connect to the network shall not adversely affect the operation and safety of other existing network users. Limitations and/or conditions of operation may be imposed on new LV non-IES EG connection in order to mitigate these issues.

Table 19: Protection Requirements for LV Non-IES EG

LV EG protection	Three Phase Connection
LV EG integrated protection	Yes
Backup protection	Yes

8.7.1 LV Non-IES EG Integrated Protection

LV non-IES EG integrated protection refers to protection configured directly on the non-IES EG. For example, for a diesel generator, this is the protection directly programmed on the diesel generator controller. Table 20 below indicates preferred protection settings. Any deviations will need to be negotiated during the application process.

Table 20: LV EG Integrated Protection Requirements

Protection Function	Setting	Maximum disconnection time
Under voltage 1	180V	11s
Under voltage 2	70V	2s
Over voltage	265V	1s
Under frequency	47Hz	2s
Over frequency	52Hz	0.2s
ROCOF	Calculated based on LV non-IES EG inertia and characteristics	≥ 0.2s
Vector Shift		Instantaneous
Power towards LV EG	Typically 5% of LV non-IES EG power rating	To be determined by proponent
Synchronisation Check	• $\Delta\varphi < \pm 15°$; to be negotiated • Frequency and voltage deviation limits to be negotiated	To be calculated based on manufacturer's specifications and synchronising method
Reconnection Time Delay	> 60s	

8.7.2 Backup Protection

Backup protection shall be required for all LV non-IES EG connections that have a total capacity greater than 30kVA. For LV non-IES EG connections with a total capacity of less than 30kVA, backup protection shall be required when:

- the integrated protection does not comply with *IEC 60255*, and/or
- secondary injection testing of the integrated protection is not possible

The backup protection relay shall be compliant with *IEC 60255* and shall trip a circuit breaker to disconnect the LV non-IES EG for all current-based and voltage-based faults.

Backup protection shall incorporate DC auxiliary supply with battery backup, UPS or self-powered options along with adequate health monitoring and alarms so as to ensure reliability. Otherwise, a fail-safe design to directly trip the circuit breaker may be required in the event of auxiliary supply failure to ensure that the LV non-IES EG disconnects within a maximum time of 2s.

The trip signal shall be hard wired to the relevant circuit breaker. Where this is not possible and a wireless scheme is required, this shall be negotiated as part of the application process. The proposed wireless scheme will be assessed based on the following:

- necessity for a wireless scheme

- dependability
- compliance of proposed equipment
- speed of operation
- failsafe functionality

Table 21 below indicates preferred protection functions for the backup protection relay.

Table 21: LV Non-IES EG Backup Protection Requirements

Backup protection function	Comments
Overcurrent (phase and earth fault) protection	Required to disconnect LV non-IES EG for faults within the proponent's site and for faults on the network. See Section 8.7.2.1 for more details.
Current unbalance protection e.g. negative sequence current protection	Current in each phase shall not deviate from the average of the three phase currents by more than 5% for periods greater than 2 minutes.
Passive anti-islanding protection	Refer to Section 8.7.2.2
Synchronisation check	$\Delta\varphi < \pm 15°$; to be negotiated with the Distributor based on manufacturer specifications Frequency and voltage deviation limits to be negotiated with the Distributor Time delay to be calculated based on manufacturer's specifications and synchronising method
Power export protection	This is site specific and shall be negotiated based on network constraints with a maximum trip delay of 2s.
Remote Tripping	This is site specific and shall be negotiated based on network constraints. Refer to Section 8.7.2.3 for remote trip scheme requirements.
Reconnection Time Delay	The backup protection is required to have a reconnection time delay of greater than 60s post voltage-based protection reset (e.g. under voltage, over voltage etc.). In other words, once the protection has operated and tripped the relevant circuit breaker or contactor, the network parameters must be within the limits set out in Table 22 for at least 60s before the LV non-IES EG can reconnect with the network. For LV non-IES EG systems greater than 1MVA, the proponent shall contact NCC prior to reconnecting the HV non-IES EG system to the network.

8.7.2.1 Overcurrent Protection

The fault clearance time for a solid phase-to-phase or phase-to-ground short circuit at the network connection point must be less than 150ms. Where this fault clearance time cannot be achieved, the proponent should consult with the Distributor to determine the maximum permissible fault clearance time to be adopted.

For an LV non-IES EG installation that is not supplied from a service fuse, it is necessary to undertake a grading study and to grade with the upstream network protection where possible. If the immediate upstream network protection device is a circuit breaker, the minimum grading margin shall be 0.3s.

8.7.2.2 Passive Anti-Islanding Protection

Voltage sensing for anti-islanding protection implemented within the interface protection device shall be connected as close as possible to the point of connection which is upstream of both the LV non-IES EG connection and any power quality improvement devices (e.g. active filters).

Table 22 below indicates preferred anti-islanding protection settings.

Table 22 may not apply to LV non-IES EG that provides network services/ancillary services, which may operate with wider protection settings while supplemented with a reliable anti-islanding protection as determined by technical studies. Any deviations shall be negotiated during the application process.

Table 22: LV Non-IES EG Anti-Islanding Protection Requirements

Protection function	Setting	Maximum disconnection time
Under voltage (V<)	179V	11.5s
Under voltage 2 (V<<)	69V	2.5s
Over voltage(V>)	265V	1.5s
Under frequency (F<)	47Hz	2s
Over frequency (F>)	52Hz	2s
ROCOF[1]	Calculated based on LV EG inertia and characteristics	Decided based on ROCOF setting
Vector Shift[1]		Instantaneous

Note:

1. The suitability of ROCOF and Vector Shift for anti-islanding protection of the non-IES LV EG is summarised in Table 23. The suitability of ROCOF and Vector Shift for anti-islanding protection depends on the loading on the HV supply feeder. As the feeder loading may vary with time, the effectiveness of ROCOF and vector shift may be compromised. Hence, the proponent shall undertake periodic review of ROCOF and vector shift at an agreed interval. The proponent will be required to modify the design of their LV EG installation if the anti-islanding protection is found to be inadequate.

Table 23: Suitability of ROCOF and Vector Shift for Non-IES LV EG

Type of LV EG	Suitability of ROCOF and Vector Shift for Passive Anti-Islanding
Synchronous generator with capacity < 1000kVA	If the generator output is more than 80% of the minimum load on the HV feeder protection zone and network sectionalisation, a minimum import or a dedicated remote trip scheme between the feeder circuit breaker and/or ACR and the LV non-IES EG's circuit breaker may be required. Refer to Section 8.7.2.3 for remote trip scheme requirements.
Asynchronous generator	An induction machine draws reactive energy for excitation from the electricity network and therefore cannot sustain operation and island. It is noted however that asynchronous LV non-IES EGs may self-excite from power factor correction capacitors and/or adjacent capacitance within the electricity network. For large LV non-IES EGs, studies will need to be undertaken to confirm that the output from such a LV non-IES EG will decay rapidly when network connection is lost. Anti-islanding protection in the form of ROCOF and voltage vector shift protection must be installed regardless of the outcome of such studies.

8.7.2.3 Remote Trip Scheme

The purpose of the remote trip scheme is to immediately and automatically transmit a trip command to the proponent's LV EG CB in response to a protection trip resulting in the loss of the relevant distribution HV feeder. Figure 8 below illustrates a typical remote trip scheme.

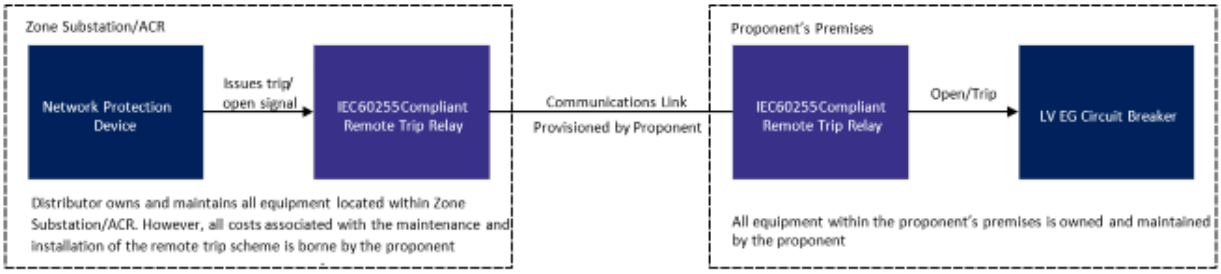

Figure 8: Typical Remote Trip Scheme

The minimum requirements for the proponent's remote trip scheme are as follows:

- Send a remote trip signal to the proponent's LV EG CB for any relevant protection operation, "loss of mains" network scenarios on the HV supply feeder including overcurrent, earth fault and sensitive earth fault protection.
- The NCC operators shall have the facility to trip the proponent's LV EG CB via SCADA and this trip shall be latched until it is reset by the NCC operator.
- Send a remote trip signal to the proponent's LV EG CB for any manual initiated CB open command on the HV supply feeder (both via HV operator on site at the supply zone substation, ACR or controller in the NCC).
- Tripping of the proponent's LV EG CB shall be completed within a maximum of 200ms from the time of the HV feeder/ACR protection operation or manually initiated command.
- The scheme shall be configured so that the proponent's LV EG CB is automatically tripped in the event that the integrity of the scheme is compromised, including equipment failure associated with the scheme. The proponent LV EG CB shall trip if the integrity of the scheme is not restored (e.g. equipment failure, loss of auxiliary supply) within 2s to ensure the scheme is fail safe.
- End-to-end supervision of the communication shall be enabled and failure of the connection shall disconnect the LV EG in less than the auto-reclose dead time of the upstream Distributor owned isolation device. The time delay for the supervision function shall be negotiated with the Distributor.
- At a minimum the following information shall be telemetered to the NCC via SCADA for each proponent remote trip scheme:
  - Equipment fail alarm for both ends
  - Health of communications link
  - Remote trip received by proponent
  - Proponent LV EG CB fail to open (after receipt of remote trip signal)
  - Proponent LV EG CB status (open/closed)
  - Loss of mains (loss of network) protection operated
  - Proponent generation (kW) with measurement accuracy within ±2%
  - Proponent reactive power output (kvar) with measurement accuracy within ±2%
  - Proponent net load (kW) with measurement accuracy within ±2%
  - Proponent net reactive power consumption (kvar) with measurement accuracy within ±2%
  - Additional voltage, current, or power quality parameters such as harmonics, flicker, voltage dips and swells may be required. These will be negotiated as part of the application process.

8.7.3 Special Operational Conditions

The following LV EG protection is required for special distribution network operational conditions:

- **Live line work**

When works are undertaken near or on live HV distribution feeders, the Distributor enables a live line operating mode where available which disables automatic reclose and enables low set instantaneous overcurrent and earth fault protection. With live line mode enabled, grading may be compromised with downstream protection (including the protection associated with the LV non-IES EG installation). If the proponent wishes to operate their LV non-IES EG when live line mode is enabled, the LV non-IES EG protection will also need to act much more quickly to disconnect from the network for phase-phase faults on the HV feeder while live line sequence is enabled. As such, additional requirements may be imposed and shall be negotiated as part of the application.

- **Total Fire Ban (TFB) Days**

For LV EG installed in areas that may experience TFB restrictions, if the proponent chooses to operate their LV EG on TFB days, the LV EG will be required to disconnect instantaneously to avoid contribution to a fault. As such, additional requirements may be imposed and shall be negotiated with the Distributor as part of the application.

- **Short term parallel**

The Distributor requires the same analysis for both short term paralleling with the network as it does for continuous parallel operation of a LV EG. This is because the consequences of maloperation are the same for short term parallel operation as with continuous operation. LV EG shall include a backup system to automatically disconnect the LV EG during a short term parallel in the event of a failure of the paralleling control scheme (i.e. extended parallel protection). LV EG will require protection as per above Table 22 if the maximum parallel time is ≥ 1s. Note that where the fault limit is compromised, paralleling for any time may not be allowed.

- **Portable LV EG parallel operation**

It is necessary to have critical protection and control systems as part of the permanent installation. See sections 8.7.1 to 8.7.3 for the required protection.

8.8 Switchgear and Control Gear Requirements

The switchgear and control gear associated with the LV non-IES EG connection shall be:

- Circuit Breakers and Control Gear – be fit for purpose and compliant with either AS or international standards (such as *IEC 60947*, *UL 508* etc.).
- Switchgear – appropriate breaking and thermal capacities based on the fault level at the switchgear location. Refer to Table 18 for the maximum LV fault level. Site specific fault level at the transformer LV terminals can be obtained from the Distributor.
- LV EG isolation – All LV EGs must have a lockable LV EG isolating device owned and operable by the proponent.

8.9 Interlocking

The interaction, interlocking and safe operation of different types of generation downstream of the point of connection shall be the responsibility of the Proponent.

8.10 Operating Voltage and Frequency

The operating voltage and frequency range requirements can be found in Table 22.

Voltage rise introduced by the LV EG shall not exceed 2%. This is the voltage rise at the LV EG terminals with respect to the voltage at the point of supply.

8.11 Metering

Metering shall be installed as per Victorian Service and Installation Rules.

8.12 Power Quality

LV non-IES EG have power quality response capability to either maintain the power quality at the point of connection or provide support to the network. LV non-IES EG shall comply with the applicable power quality requirements of the *AS/NZS 61000* series as well as relevant Victoria regulations (e.g. Victorian Distribution Code) and licence conditions, including but not limited to:

- Network voltage control
- Voltage fluctuations
- Harmonics
- Voltage balance

8.12.1 LV Non-IES Voltage Response Modes

LV non-IES EG can be configured with any of the following modes:

- Fixed power factor control mode
- Voltage control mode
- Reactive control mode

The voltage response mode configured for LV non-IES EG shall be negotiated as part of the application process as it is dependent on network characteristics at the point of connection.

8.12.2 Network Ancillary Services

AEMO is responsible for maintaining the network frequency close to 50Hz in accordance with the NEM frequency standards, for keeping the voltage within an acceptable range at particular nodes on the transmission network and for scheduling power flow between regions while maintaining power flows within the capability of plant. AEMO achieves these objectives by dispatching scheduled generation to match the load and via ancillary services.

Ancillary services can be any of the following:

- Frequency Control Ancillary Services (FCAS)
- Network Control Ancillary Services (NCAS)
- System Restart Ancillary Services (SRAS)

In practice FCAS and NCAS are offered by LV EGs by providing either real power or reactive power reserves that may be required in response to a network fluctuation, disturbance, or event or based on load flows to provide local network support. Any LV EG has the option to provide ancillary services.

LV non-IES EG participating in network ancillary services has the potential to rapidly change network load, resulting in significant voltage impact on the local network. Hence, the LV non-IES EG shall adopt necessary controls to prevent adverse impacts on the power quality at the point of connection while generating to provide ancillary services.

8.13 LV Embedded Networks with Embedded LV EG

LV embedded network operator is exclusively responsible for the management of the embedded network including any LV EG within the embedded network as the Distributor does not have direct relationship with the LV EG and/or the proponent. Hence, the LV embedded network operator shall provide all materials which demonstrates compliance to this document and other applicable standards and regulations.

The Distributor however may require remote tripping of the EG. This will be defined in response to the connection application.

8.14 Communications Systems

For LV non-IES EG systems requiring remote trip schemes, the communication requirements are outlined in Section 8.7.2.3.

Proponents shall install remote monitoring of their LV non-IES EG systems to ensure that the proponent is promptly notified of issues with their LV non-IES EG systems. Remote monitoring of LV non-IES EG systems by the proponent may be achieved via use of the LV non-IES EG manufacturer's software applications.

8.15 Data and Information

8.15.1 Static Data and Information

The static data and information shall be provided by the proponent as listed in Appendix E: Static Data and Information. The Distributor will provide this data to AEMO's Distributed Energy Resource Register (DERR) on behalf of the proponent.

8.15.2 Dynamic Data and Information

For LV non-IES EG systems requiring remote trip schemes, the dynamic data requirements are outlined in Section 8.7.2.3.

Additional remote monitoring may be required and will be negotiated upon identification of the requirement.

8.16 Cybersecurity

The LV EG settings shall be secured against inadvertent or unauthorised tampering. Changes to the LV EG settings shall require the use of tools (e.g. special interface devices and passwords) and special instructions not provided to unauthorised personnel.

8.17 Technical Studies

Table 24 below details the technical studies that shall be completed as part of the connection application:

Table 24: Technical Studies Required for LV Non-IES EG Connections

Technical Studies	LV Non-IES EG
Voltage Rise	✓
Voltage Study	–
Power Flow Study	–
Fault Level Contribution Study	✓
Preliminary Impact Assessment	–
Protection Settings Report	✓
Power Quality Impact	–
Full Impact Assessment	–
Symbols are used to denote technical studies requirements, where: ✓ Represents that technical studies shall be required – Represents that technical studies may be required	

As part of the application process, the Distributor, upon request, will provide the proponent with the following for the proponent to complete the required technical studies:

- network fault level studies up to the supply transformers' LV terminals
- network protection information for distribution assets (e.g. protection settings)
- network equipment information for distribution assets

Where one or more of the technical studies does not meet assessment criteria, the Distributor shall provide the proponent feedback on components of the submission that has not satisfied the assessment requirements of network connection. The proponent has the option to discuss with the Distributor:

- Alternative configurations of the LV non-IES EG systems
- Network augmentation (and associated cost of network augmentation)

8.17.1 Voltage Rise Calculations

Refer to https://myenergy.ue.com.au online application service for further details.

Voltage Study, Power Flow and Power Quality Impact Studies may be required depending on the generation system size and location.

8.17.2 Fault Level and Protection Settings Report

A comprehensive protection study may be requested by the Distributor for certain installations. Where this is required, the fault level contribution and protection settings shall be included in this study.

Where a comprehensive protection study is not required, the protection settings can be provided on either the Single Line Diagram or Protection Schematic.

Refer to https://myenergy.ue.com.au online application service for further details.

9. Testing and Commissioning for LV Non-IES EG

Testing and commissioning of the LV non-IES EG installation shall be undertaken in accordance with *AS/NZS 3000, AS/NZS 3010*, the equipment manufacturer's specifications and to the technical requirements stipulated in this document, in order to demonstrate that the installed LV non-IES EG system meets the requirements of the connection agreement.

Note these tests shall be site acceptance tests and not type tests or factory acceptance tests of the equipment.

In addition, the testing and commission requirements for grid connection of the LV non-IES EG system are:

1. Testing and commissioning plans shall be produced by the proponent.
2. Testing and commissioning acceptance shall be signed off by a suitably qualified person
3. Testing and commissioning acceptance may require the Distributor to carry out witnessing at the proponent's expense

Table 25: Testing and Commissioning Requirements for LV Non-IES Connections

Testing and Commissioning Submission	LV Non-IES EG	
	Exporting	Non-exporting
Protection settings and performance[1]	✓	✓
Power quality settings and performance[2]	–	–
Export limits settings and performance	–	✓
Communications performance for monitoring system[3]	✓	✓
Shutdown Procedures	–	–
Confirmation that a site operation procedure and maintenance plan is available to the proponent	✓	✓
Confirm system is as per specifications	✓	✓
Confirm SLD is located on site	✓	✓
As-built Documentation and Drawings	✓	✓
Certificate of Electrical Safety (CES)	✓	✓
UE LV EG Commissioning Form (see Appendix D: Static Data and Information)	✓	✓

Symbols are used to denote testing and commissioning requirements, where:

✓ Represents that testing and commissioning shall be required

– Represents that testing and commissioning may be required

Notes:

1. Protection Settings and Performance

   The LV non-IES EG backup protection relay shall be tested by secondary injection. Where a backup protection relay has not been installed, the LV non-IES EG integrated protection shall be tested by secondary injection. All functional tests including synchronisation tests shall be carried out to prove the protection and control scheme operates as per the design. Over- and under-voltage protection shall be tested for each phase.

2. Power Quality Settings and Performance

   On-load tests shall be undertaken after protection settings and performance tests have been completed. During these onload tests, the value of electrical parameters shall be recorded such as LV EG voltage, current, active power, power factor and frequency. On-load tests shall confirm the LV EG regulates active power and power factor within a certain tolerance of the applied settings when synchronised with the Distributor's network

3. Communications performance for monitoring system

   Where remote tripping is required, full end-to-end testing of the remote trip scheme is required.

10. Operations and Maintenance

LV EG systems shall be operated and maintained to ensure compliance with their connection agreement and all legislation, codes, and/or other regulatory instruments at all times. The operations and maintenance requirements for LV EG connections, includes:

1. The LV EG system shall be operated and maintained to ensure compliance with the connection agreement and all legislation, codes, and/or other regulatory instruments at all times
2. As a function of the routine maintenance checks, a record of inspection activities undertaken at the site demonstrating that the installation has been tested and is safe to remain connected to the network is required. Record of inspections shall be retained by the customer and made available to the Distributor upon request

The following documentation is to be kept at the LV EG installation in compliance with relevant codes and is to be readily accessible by the Distributor's representatives:

- A single line diagram showing all electrical metering points, protection functions and zone of coverage.
- A record of all approved protection settings.
- A copy of the approved operating procedures.
- Maintenance plan and records.

In addition, the proponent shall:

1. Maintain and operate the LV EG installation in a safe condition
2. Ensure that any changes to the LV EG installation are performed by an electrician lawfully permitted to do the work and that the proponent holds a Certificate of Electrical Safety (COES) issued in respect of any of the changes
3. Seek Distributor approval prior to altering the connection in terms of an addition, upgrade, extension, expansion, augmentation or any other kind of alteration, including any changes to protection functions or settings.

If any breach of this technical standard is suspected, the Distributor may undertake an investigation. If the investigation reveals a breach, the proponent shall be required to rectify this breach and pay for the costs associated with the investigation and associated works undertaken.

11. Modelling

Proponents proposing to connect generation with a total AC capacity of 1 MW or greater shall provide RMS and EMT models of their plant as part of their connection application. RMS and EMT models shall comply with AEMO'S *Power System Model Guidelines* (PSMG) in conjunction with S5.3.1 of the NER, and be provided with the following information:

- Completed Power System Design and Setting Data Sheets;
- Site-specific RMS models of all plant;
  - RMS models shall be provided in PSS/E format, version(s) as required by the Network Service Provider.
- Site-specific EMT models of all plant;
  - EMT models shall be provided in PSCAD format, version(s) as required by the Network Service Provider.
- A RUG for both RMS and EMT models in the template specified in AEMO's Releasable User Guide Template.

12. Generator Monitoring Meter (Network Device)

Proponents may choose to use one or more Generation Monitoring Meters (GMM) as the means to achieve remote backstop capability. The GMM is a Network Device (as defined under *NER* chapter 7, clause 7.8.6) and shall be installed and wired to a design similar to Revenue or NEM metering. However, it shall not be utilised in any Market Settlements or Retail / Network billing.

The GMM shall provide the following functions.

- Operate a normally open trip output contact that shall be used to disconnect LV EG from the distribution network, where the GMM's contact closing is a trip commend
- Measure LV EG generation data: Voltage (R,W,B), Current (R,W,B), kW, kVAr

Multiple GMMs may be installed depending on the configuration of the installation. Refer to Appendix B for typical generation and GMM installations.

12.1 GMM Installation Requirements

12.1.1 Current Transformer and CT Chamber

The GMM, as a Network Device, remains under the ongoing control of the Distributor.

The design and installation is to be undertaken in accordance with the requirements of Chapter 8 of the *Victorian Service and Installation Rules (VSIR)*, and in particular with section 8.11 LV "Current Transformer Metering". A typical wiring diagram is shown in Appendix D:.

UE will supply 3 x LV current transformers and associated wiring loom up to 10 metres long for installation by the customer in accordance with the *VSIR* clause 8.11.5, 8.11.6 and 8.11.7. The CTs shall be as per *VSIR* clause 8.11.3.2 and figure 8.11-E. The customer shall provide the CT chamber in accordance with *VSIR* clause 8.11.5 and be labelled "Generator Monitor Metering Transformers" complying with clause 5.4. The customer shall supply and install LV 32A fuse bases and cartridges, and 4mm2 single core double insulated wiring from the busbar to the 32A fuse bases as per *VSIR* clause 8.11.7.1.

12.1.2 Installation

The Customer shall supply the meter panel to the Distributor for fit out as per *VSIR* clause 8.11.2.4. The Distributor shall install the meter panel with test block, fuses and the GMM and any specific communications equipment such as aerials. The Customer shall provide a suitable location for the meter panel installation. Any site-specific mounting equipment to secure the meter panel shall be provided by the Customer. The customer shall ensure that the integrity of the meter panel, and associated equipment are not compromised after installation.

Where the GMM is to be located within a basement or internal switch room, a remote antenna (outside of the building) may be required for communications. The Customer shall consult with the Distributor and provide suitable conduit for installation of the antenna cabling. This conduit, draw wire or antenna cabling installation and any wall penetrations shall be provided by the Customers as per *VSIR* clause 8.12.2.1.

UE shall commission the GMM into service.

12.1.3 Control Signal Wiring

The voltage connection to the GMM shall be such that the GMM supply is not interrupted following operation of the EG disconnection function (e.g. voltage supply to the GMM shall be connected upstream of the disconnection device). The voltage supply to the GMM shall be nominal 230/400V AC.

The GMM control wiring shall be in accordance with Appendix C and shall consist of one output contact. This output contact shall be for control purposes only and may be used to drive an auxiliary relay or digital input. However, it may not be used for direct tripping of circuit breakers. To allow for different installations with varied control voltages the GMM output is provided as a voltage free contact. The Customer shall provide an appropriate extra low DC control voltage for switching by the GMM output. This voltage is to be limited to a maximum of 50V DC or 240V AC with suitable fusing at the source end of the wiring. The GMM output contact shall not exceed the maximum contact rating of 2A.

The Customer shall provide the GMM control wiring to the meter board location. The GMM, associated fusing and test block in the meter panel will be sealed by the Distributor and shall not be accessed by others.

This GMM and associated equipment shall be independent to, and segregated from, all revenue metering equipment.

12.1.4 Access

The meter panel shall be located such that it meets the requirements of section 8.5 and 8.6 of the *VSIR*. The location shall provide safe and easy access. The Customer shall also ensure that a safe environment, required isolations, safe and easy access to the work area is provided to the Distributor during GMM installation, commissioning, and future maintenance works.

12.1.5 Configurations with Multiple GMM

For installations that have multiple generators connected to different distribution boards, the GMM shall be installed at the relevant upstream generation bus. Where there are multiple inverter based generators intended to be directly connected to a switchboard, it is expected that the generation will be connected via a dedicated switch to a generation bus in accordance with *AS 4777.1* section 5.5. The GMM disconnect signal shall disconnect the main generation CB (e.g. main switch-inverter supply as per *AS4777.1*) via a suitable control scheme (i.e. slave relay operation).

12.1.6 Off-Grid Operation

Customers intending to operate the generation while disconnected from the distribution network (i.e. during loss of mains supply or Distributor network outage) have the option to design the generation system such that the generation disconnection signal is interlocked with the incoming main CB status.

- Main incoming CB is closed – GMM shall disconnect the generation once the GMM output operates.

- Main incoming CB is opened – GMM is not required to disconnect the generation.

12.1.7 Equipment Replacement

Where works occur at an existing site with generation capacity ≥200kVA, that is not a like for like warranty replacement, the site shall be brought up to the latest standard in terms of GMM requirements.

12.1.8 Alternative Disconnection Capability

Where the installation has either a remote trip scheme or NVD based anti-islanding scheme as described in NVD Based Anti-Islanding Scheme (UE-ST-5003), a GMM may not be required if the emergency disconnection command can be implemented via UE SCADA to trip the relevant generation.

12.2 Testing and Commissioning

The following pre-commissioning tests shall be undertaken as a minimum. The Customer shall provide the required access, isolations and information to the Distributor.

- CT connection, accuracy, burden, polarity test up to the test links of the metering panel.
- Point to point test of voltage supply wiring up to the test links of the metering panel.
- Analogue measurement verification inclusive of polarity of kW and kVAr readings.
- Functional EG disconnect test.

The Customer shall provide the Distributor with a copy of the COES for the installation prior to commencement of commissioning.

The "Sanction to Connect" will be granted upon satisfactory completion of the GMM commissioning tests and generation system commissioning tests.

12.3 Labelling

Labels to be attached to meter panel and CT chamber to read as per sample below.

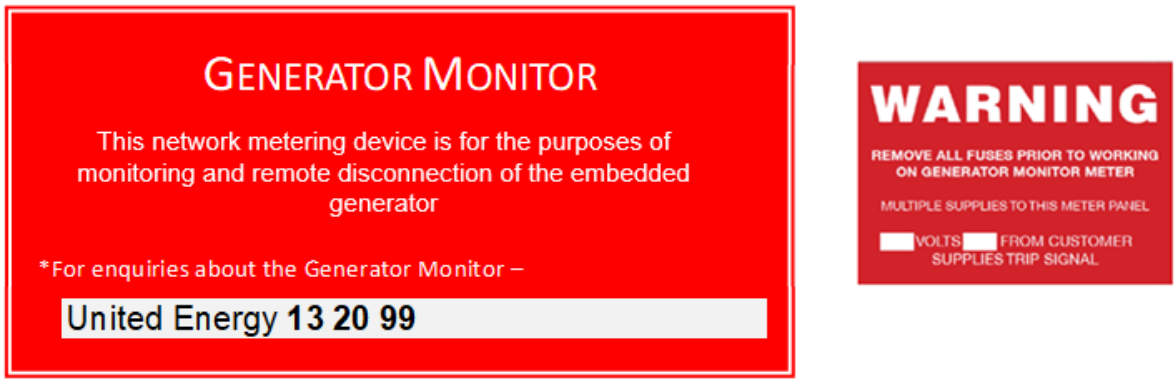

Figure 9: GMM Labelling

Appendix A: Deviations from the National DER Connection Guidelines

Table 26: Table of Deviations from National DER Connection Guidelines

Section	Description of Deviation	Type of Deviation	Justification
1.1	The maximum system capacity for both LV EG IES and LV non-IES EG system is up to the maximum rating of the main circuit breaker and less than 5MVA, instead of greater than or equal to a set kVA as per the National DER LV EG Connection Guideline. In addition, only two phase and three phase LV EG IES of greater than 30kVA are allowed and only three phase LV non-IES EG are allowed	Promote improved benefits to Australia's electricity system	Promotes clarity on EG capacity for LV EG connection and differentiates IES capacity requirements from the <200kVA connection.
2.1	Definition of IES is different from the National DER LV EG Connection Guideline	To meet jurisdictional requirement	The definition was amended to align with *AS/NZS 4777.1*.
2.3	Terminology of the word 'may' and 'should' were swapped as described in the National DER LV EG Connection Guideline	Promote improved benefits to Australia's electricity system	Clarifies requirements for proponents
2.3.1	No subcategories based on IES size, unlike National DER LV EG Connection Guideline which set IES subcategories based on size (i.e. ≤ 200kVA or > 200kVA)	Promote improved benefits to Australia's electricity system	Promotes clarity on subcategories by reducing subcategories to only material subcategories
4 (5 in ENA guide)	Moved Fees and Charges section from section 5 as shown in ENA Guideline to section 4	Promote improved benefits to Australia's electricity system	Promotes readability and easier reference with sections 1 – 4 being common to both IES and non-IES EG.
5 – 10 (4, 6 and 7 in ENA guide)	Created Part A for IES specific requirements and Part B for non-IES specific requirements. This is different to the approach from ENA guideline where IES and non-IES requirements were combined in the various sections	Promote improved benefits to Australia's electricity system	Promotes readability and easier reference with dedicated sections for IES and non-IES EG specific requirements

Section	Description of Deviation	Type of Deviation	Justification
5.3.1, 8.3.1 (4.3.1 in ENA guide)	Export limits at connection point is 10kW for two phase connections and up to maximum rating of the main circuit breaker and total capacity of less than 5MVA for three phase instead of being case by case assessment of whether export limit is required in the National DER LV EG Connection Guideline	Promote improved benefits to Australia's electricity system	To facilitate LV EG connections by streamlining the assessment process whilst not adversely impacting the network
5.8.4, 8.8	Added an additional section on switchgear and control gear requirements	To meet jurisdictional requirement	To ensure associated equipment with LV EG are compliant with AS and international standards
5.11.3, 8.10.3	Added an additional section on network ancillary services requirements	Promote improved benefits to Australia's electricity system	To ensure system stability when the LV EG provides network ancillary services
5.12	Added an additional section on emergency backstop controls	To meet jurisdictional requirement	To ensure PV systems are controllable to prevent system instability
5.13, 8.11	Added an additional section on embedded networks with EG	Promote improved benefits to Australia's electricity system	To ensure EG within an embedded network will not adversely impact the network
5.14.1, 8.12.1	Communication requirements for EG systems >1000kVA instead of 200kVA in the National DER LV EG Connection Guideline	Promote improved benefits to Australia's electricity system	Promotes clarity on communication requirements to only systems that require remote trip
11	Added an additional section on modelling requirements	Promote improved benefits to Australia's electricity system	To ensure generation systems will not cause system instability
12	Added an additional section detailing Generation Monitoring Meters	To meet jurisdictional requirement	To ensure PV systems are controllable to prevent system instability

Appendix B: Typical Configurations

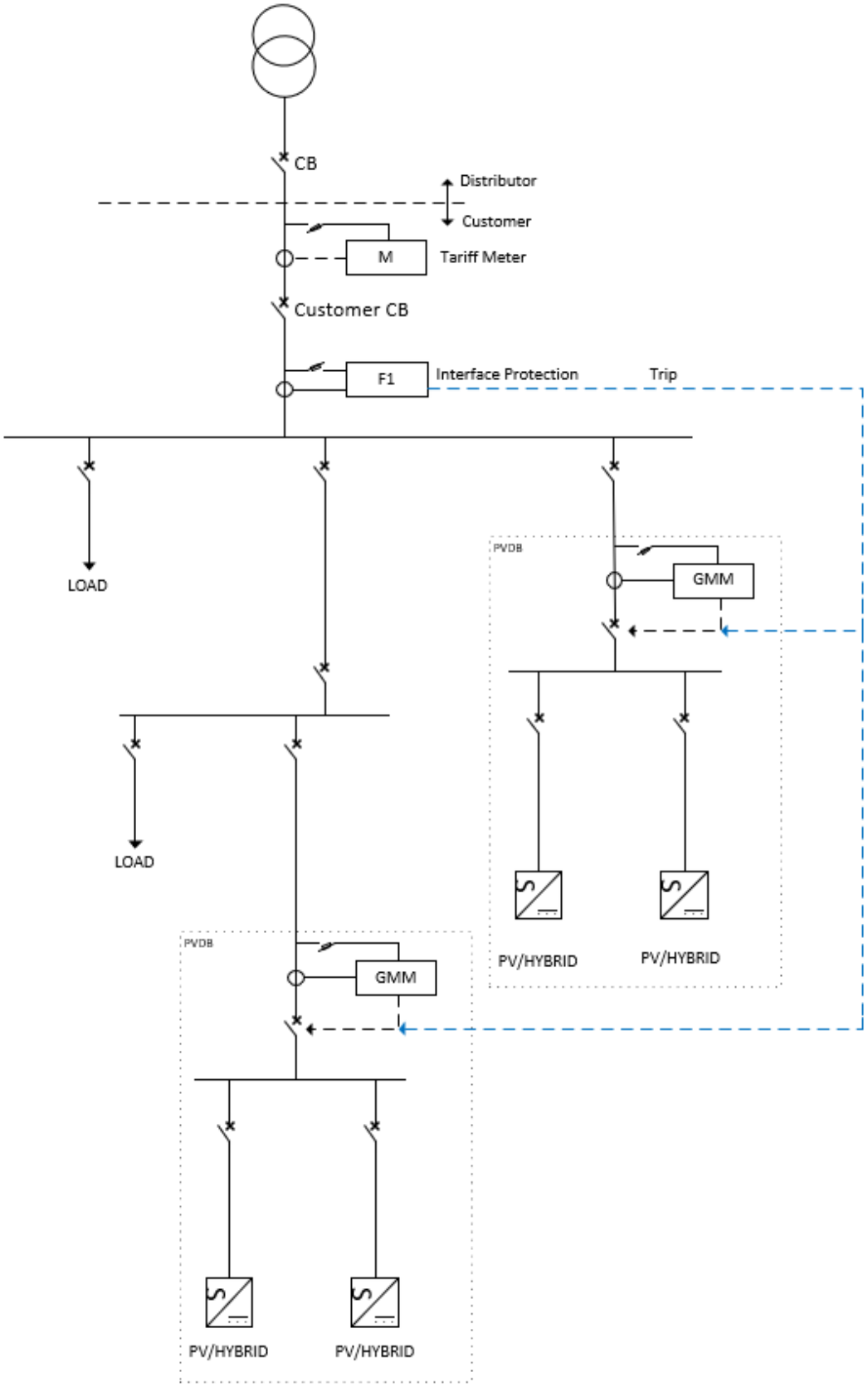

Figure 10: Typical GMM Configuration

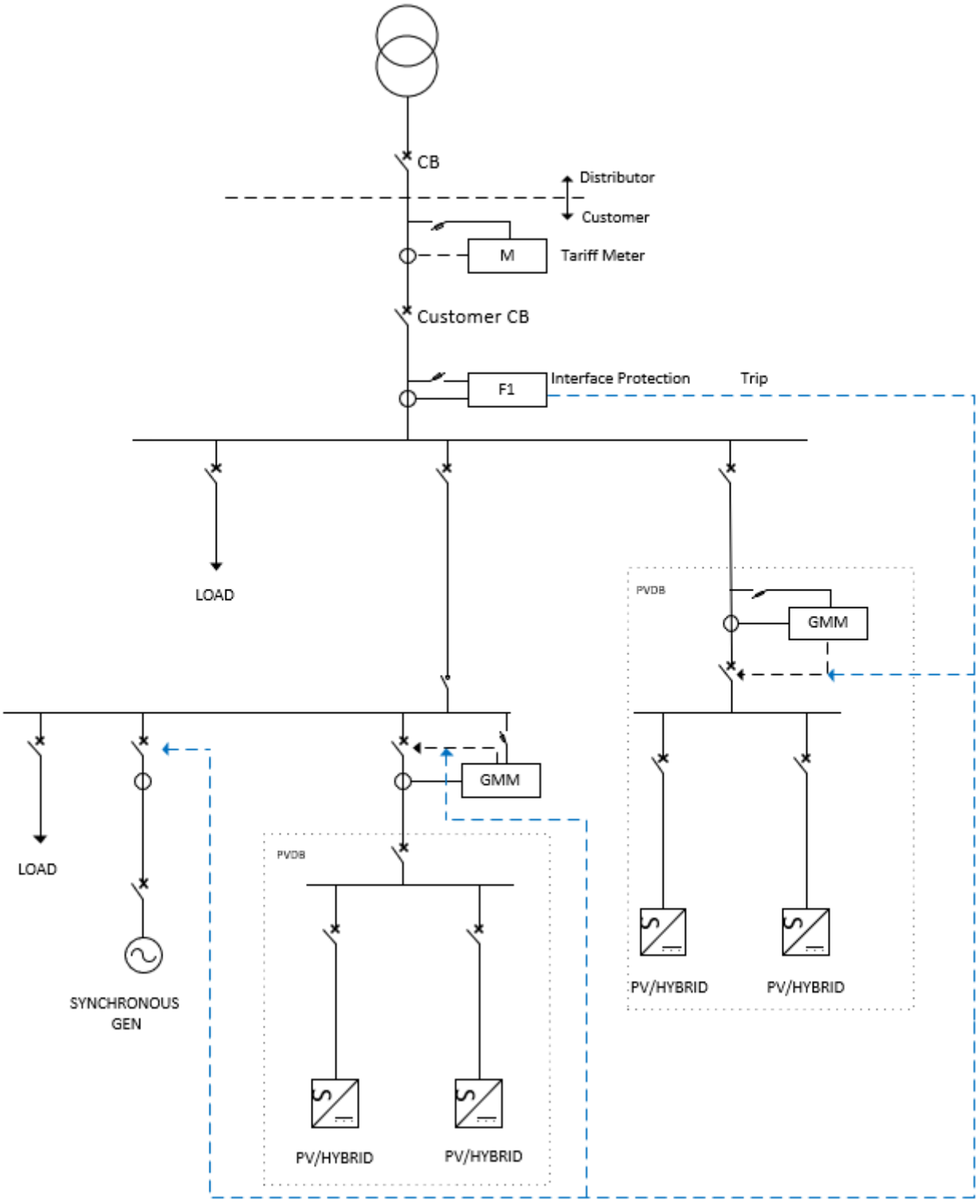

Figure 11: Typical GMM Configuration with Synchronous Generation

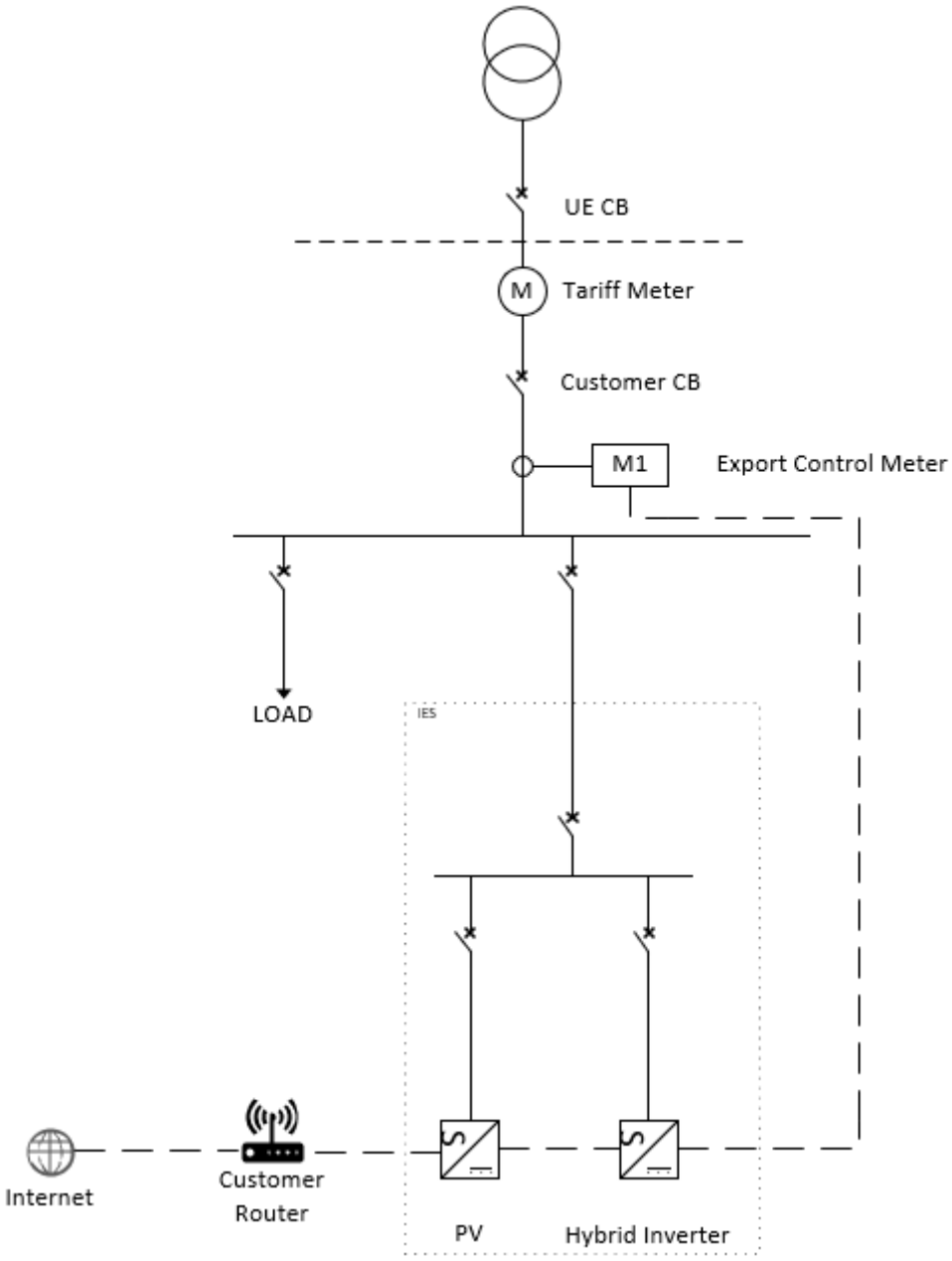

Figure 12: Typical CSIP-AUS Configuration with Compliant Inverters

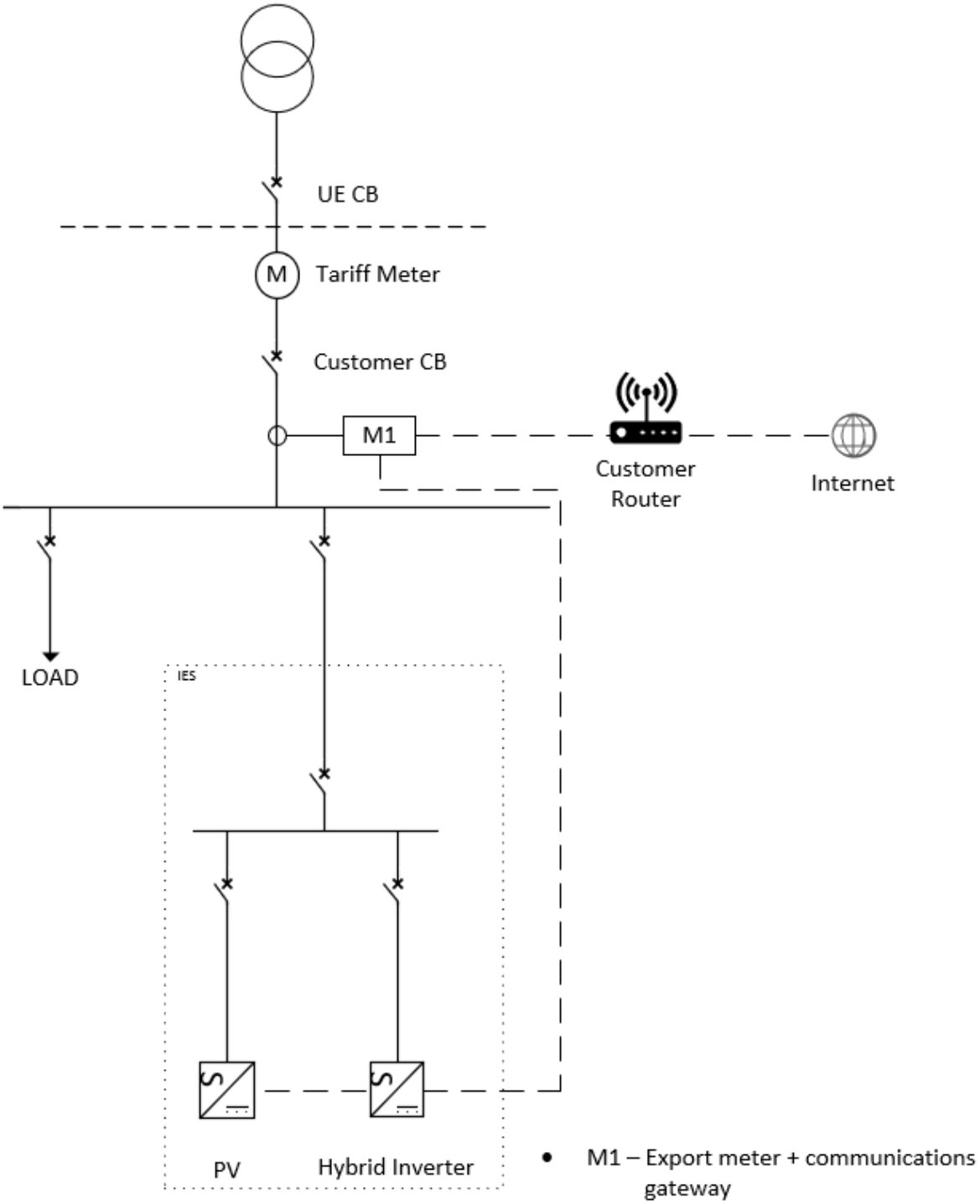

Figure 13: Typical CSIP-AUS Configuration with Gateway Device

Appendix C: Typical Configurations for Embedded Networks

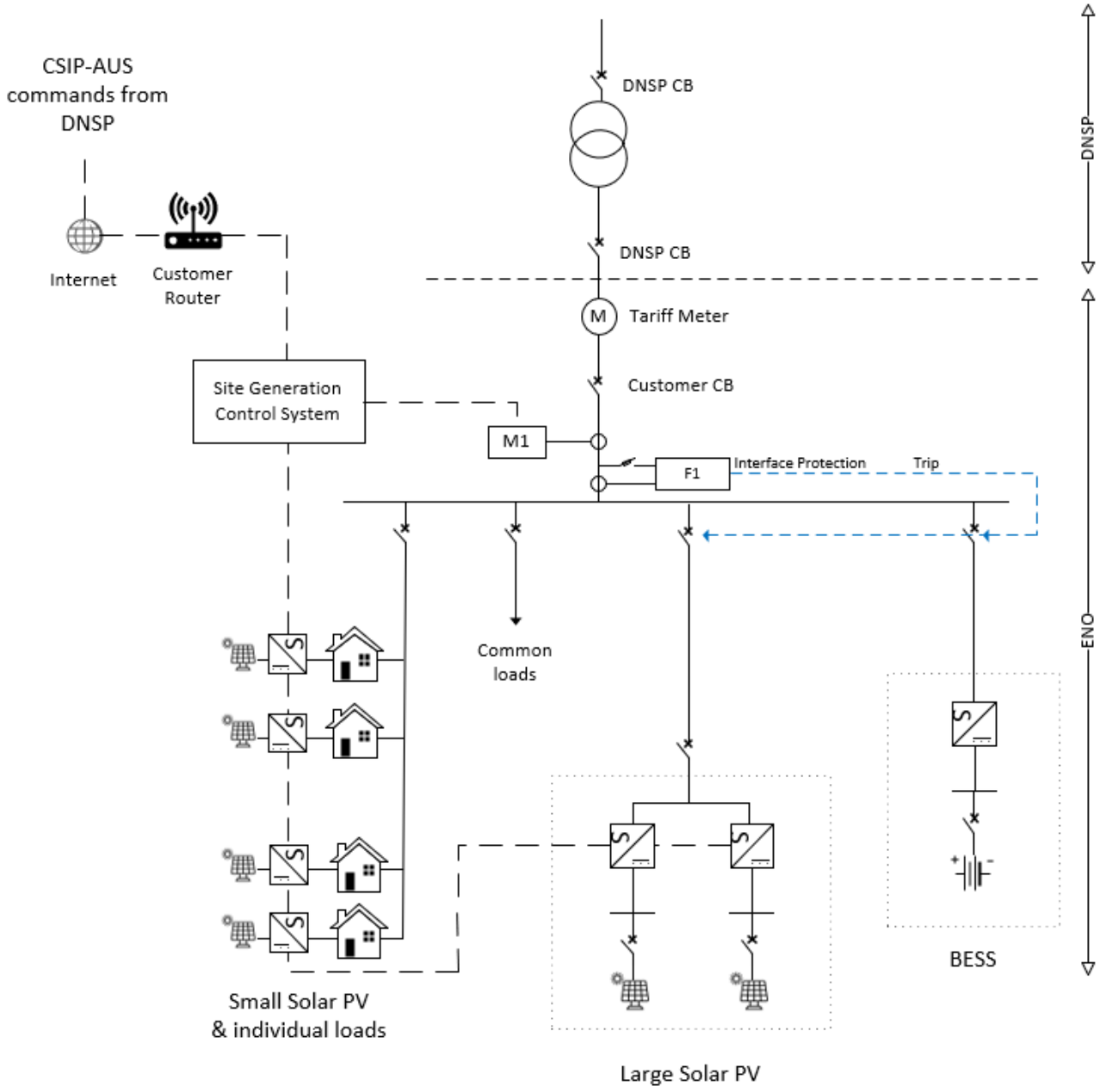

Figure 14: Typical CSIP-AUS Configuration

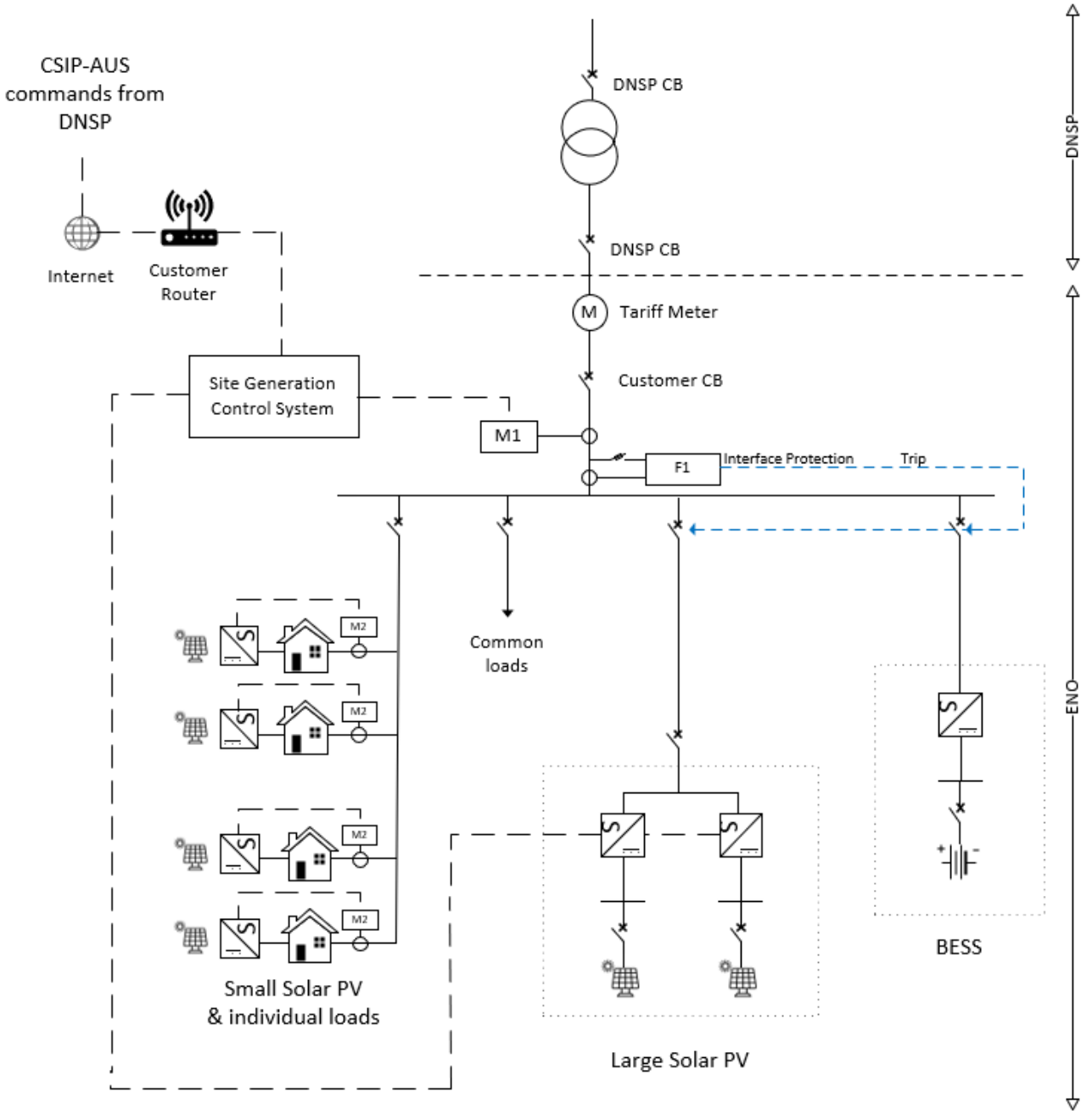

Figure 15: Typical CSIP-AUS Configuration with Export Limited Individual Buildings

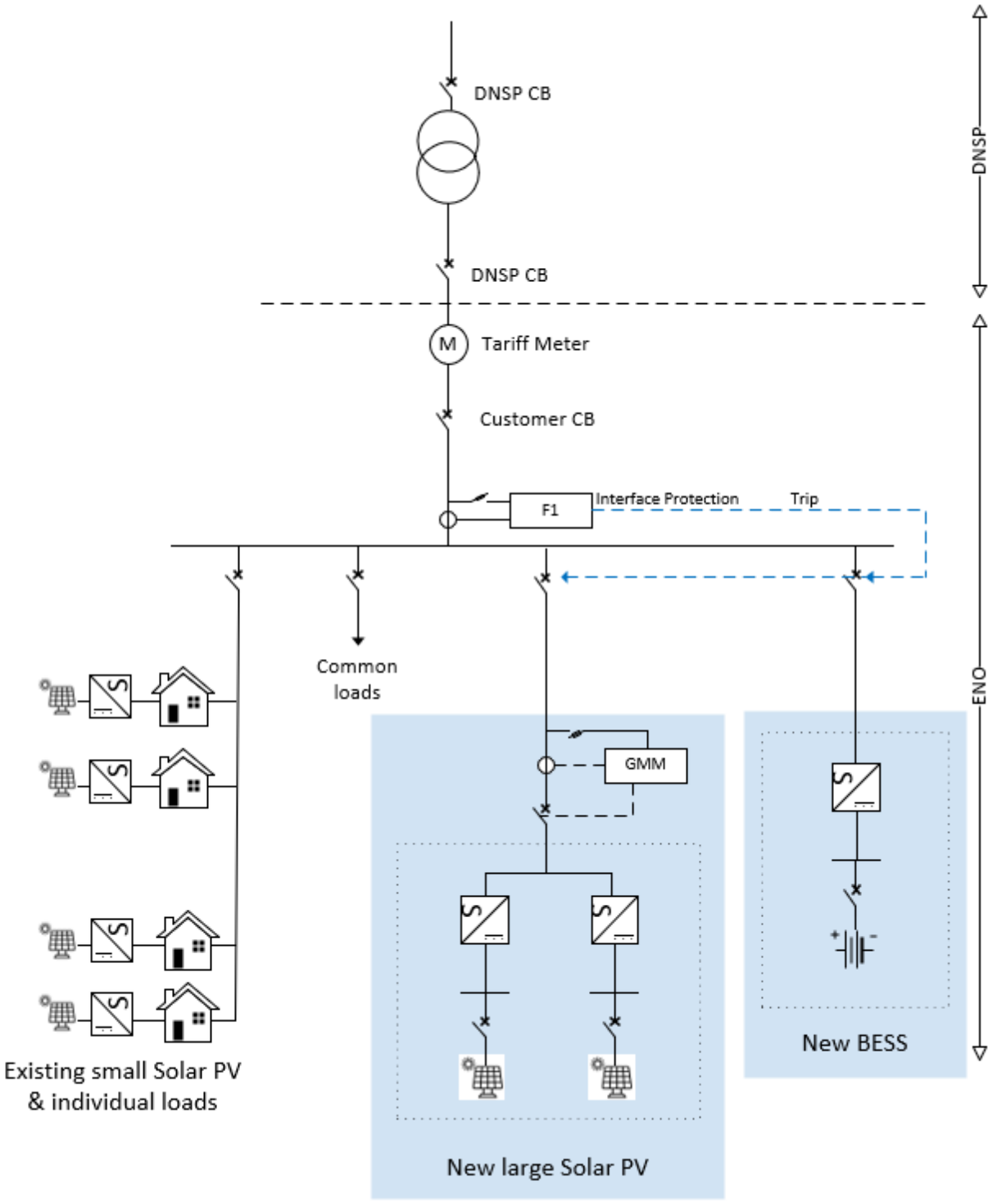

Figure 16: Typical GMM Configuration

Appendix D: Generator Monitor Wiring Diagrams

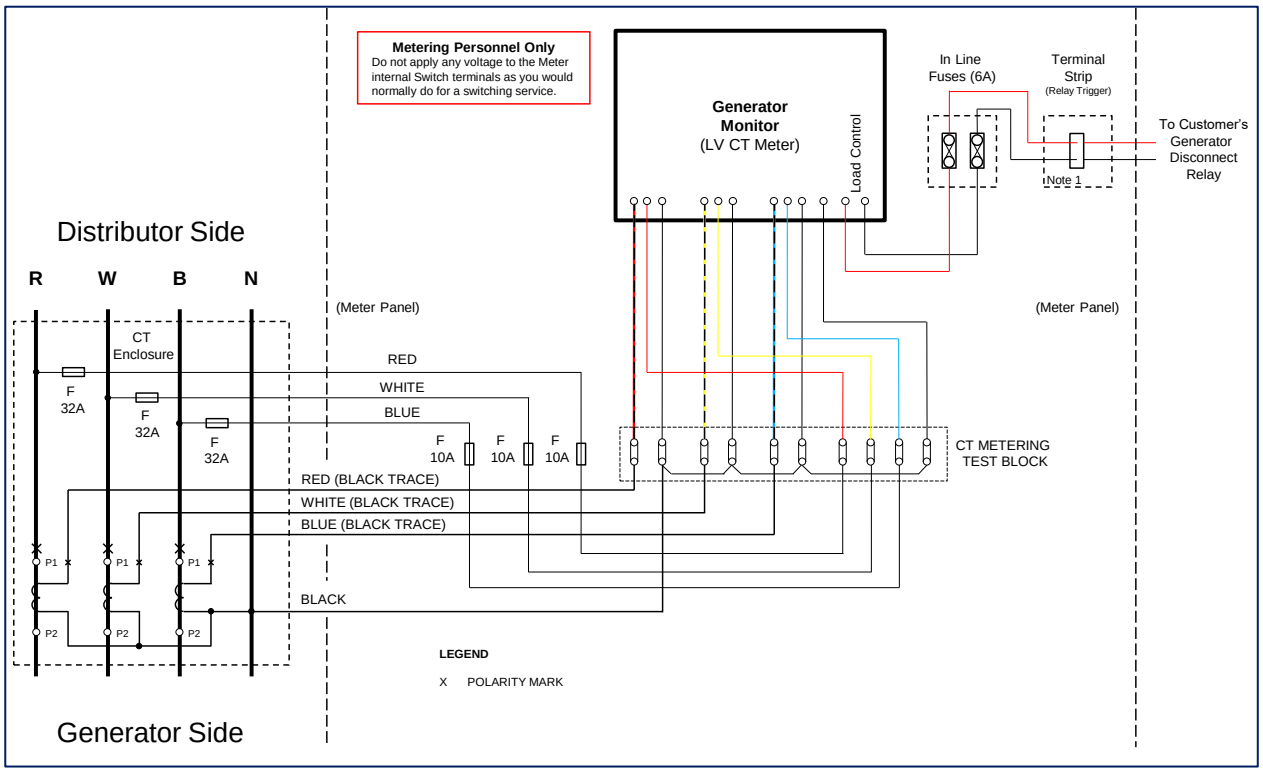

Figure 17: Typical Wiring Diagram for Generator Monitoring Meter

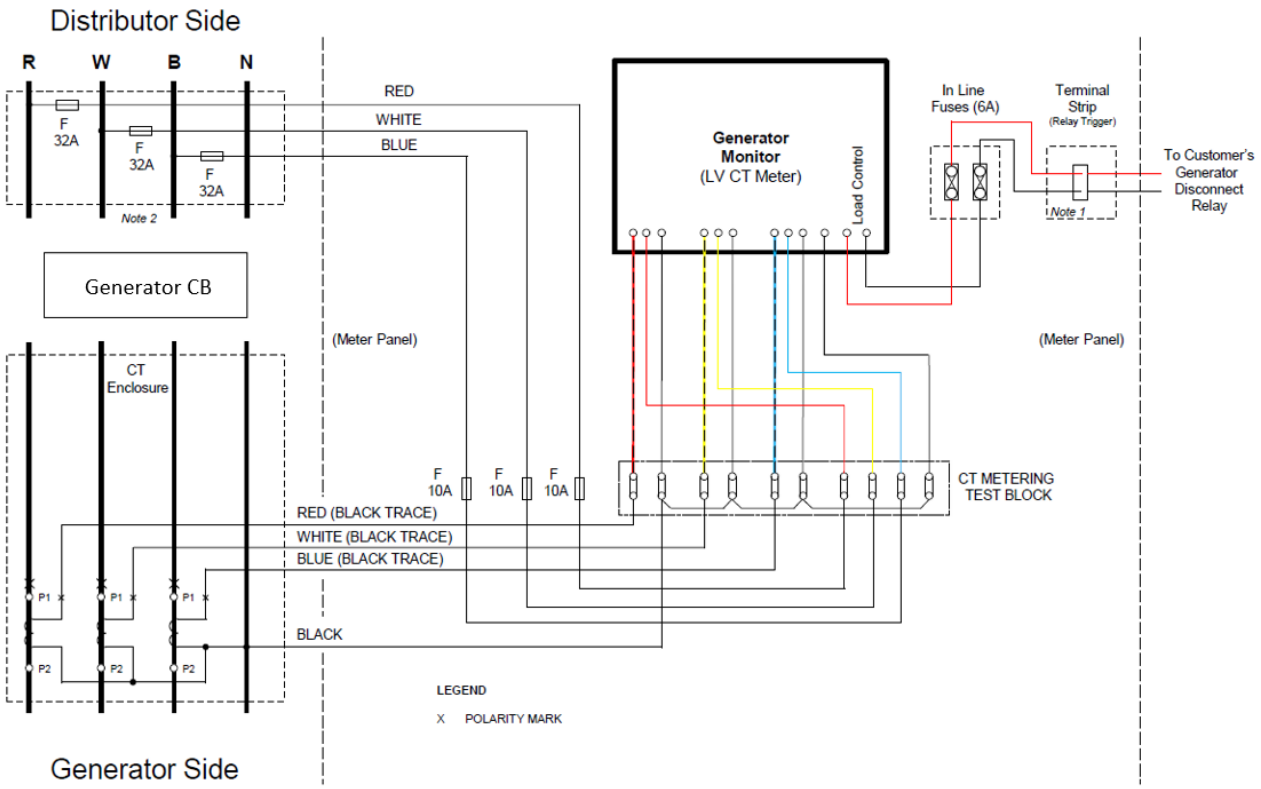

Figure 18: Typical Wiring Diagram for Generator Monitoring Meter

Notes:

1. In-line fuses and terminal strip required.
2. Generator Monitoring Meter voltage supply to be sourced from a point upstream of the generator circuit breaker.

Appendix E: Sample Offer to Connect

A sample offer to connect can be found on the Distributor's website.
For non-registered LV EG customers, please refer to the document titled:
Generator Agreement - Retail Customers
For registered LV EG customers, please refer to the document titled:
Generator Agreement - Registered Market Participant

Appendix F: Static Data and Information

Static data and information to be provided by the proponent on the LV EG connection can be found on our website.
UE forms:
For LV EG IES connections, please refer to the form titled:
IES Commissioning Form (UE-FM-5003)
For LV non-IES EG connections, please refer to the form titled:
Non-IES Commissioning Form (UE-FM-5004)
For LV connections with both IES and non-IES EG, please refer to the form titled:
Combined Commissioning Form (UE-FM-5005)