AusNet

united energy

Maintaining supply reliability in the Cranbourne supply area

RIT-T Project Specification Consultation Report

Monday, 7 October 2024

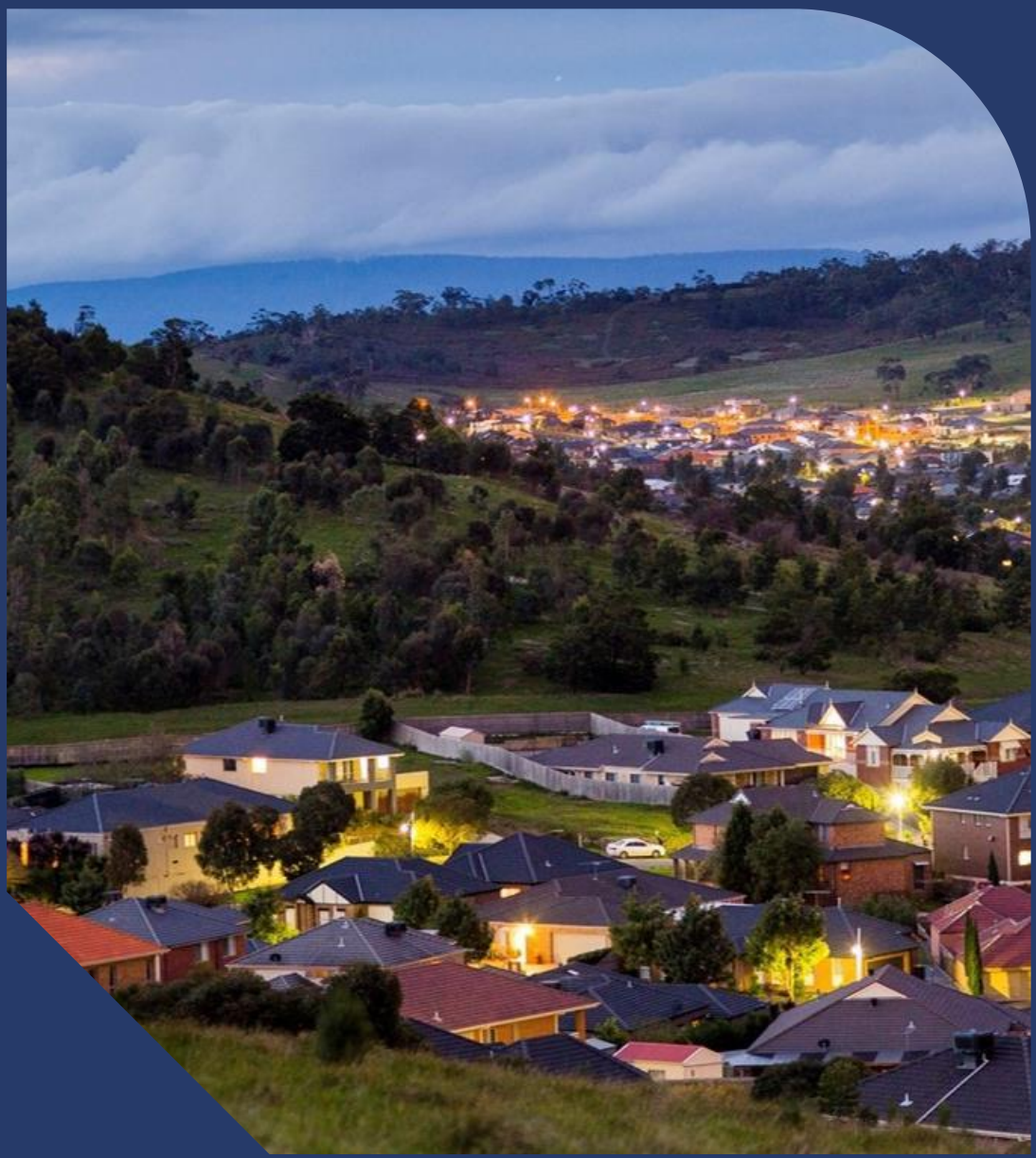

Table of contents

Important notice 3

Executive summary 4

1. Introduction 6

2. Description of the identified need 7

2.1. Cranbourne supply area 7

2.2. Identified need 9

3. Assumptions used in identifying the identified need 12

3.1. Assessment method 12

3.2. Input assumptions 12

4. Technical characteristics of the identified need 19

4.1. Performance requirements 19

4.2. Submission requirements 20

5. Description of all potential credible options 21

5.1. Option 1 – Do nothing 21

5.2. Option 2 – Non-network or SAPS solutions 21

5.3. Option 3 - Install a 4th 220/66 kV transformer at CBTS 22

5.4. Option 4 - Install two 50 MVAr 66 kV capacitor banks 23

5.5. Option 5 - Establish new feeders to offload CBTS 23

5.6. Option 6 - Establish a new 220/66 kV terminal station 25

6. Submissions and next steps 26

6.1. Request for submissions 26

6.2. Next steps 26

Important notice

Purpose

AusNet and United Energy have prepared this Project Specification Consultation Report (PSCR) in accordance with clause 5.16.4 of the National Electricity Rules (NER). This PSCR is the first stage of the *Cranbourne Supply Area RIT-T* consultation process, relating to maintaining supply reliability in the Cranbourne supply area.

Disclaimer

This document may or may not contain all available information on the subject matter this document purports to address. The information contained in this document is subject to review and may be amended any time.

To the maximum extent permitted by law, AusNet and United Energy make no representation or warranty (express or implied) as to the accuracy, reliability, or completeness of the information contained in this document, or its suitability for any intended purpose. AusNet and United Energy (which, for the purposes of this disclaimer, includes all of the related bodies corporate, officers, employees, contractors, agents and consultants, and those of the related bodies corporate) shall have no liability for any loss or damage (be it direct or indirect, including liability by reason of negligence or negligent misstatement) for any statements, opinions, information or matter (expressed or implied) arising out of, contained in, or derived from, or for any omissions from, the information in this document.

Executive summary

AusNet and United Energy are regulated Victorian Distribution Network Service Providers (DNSPs) that supply electrical distribution services to more than 795,904 and 709,122 customers, respectively. AusNet's electricity distribution network services eastern rural Victoria and the fringe of the northern and eastern Melbourne metropolitan area. United Energy's electricity distribution network services the east and south east Melbourne metropolitan area and the Mornington Peninsula.

As expected by our customers and required by the various regulatory instruments that we operate under, AusNet and United Energy aim to maintain service levels at the lowest possible cost for our customers. To achieve this, we assess options and develop plans that aim to maximise the present value of economic benefit to all those who produce, consume and transport electricity in the National Electricity Market (NEM). Where relevant, this includes preparation of and consultation on regulatory investment tests. In Victoria, the DNSPs have responsibility for planning and directing augmentation of the transmission connection assets that connect their distribution systems to the Victorian shared transmission system. This report relates to proposed investment on the transmission connection assets at Cranbourne Terminal Station (CBTS) and as such, is subject to a regulatory investment test for transmission (RIT-T).

CBTS supplies electricity to parts of the AusNet and United Energy electricity distribution networks. In November 2022, AusNet and United Energy jointly completed a RIT-T consultation on augmentation of the transmission connection assets at CBTS. However, it is considered prudent to reopen that RIT-T given some of the inputs were materially changed.

This project specification consultation report (PSCR) is stage one of the new *Cranbourne Supply Area RIT-T* consultation process and has been jointly prepared by AusNet and United Energy in accordance with the requirements of clause 5.16 of the National Electricity Rules (NER). This notice contains information to enable prospective non-network and standalone power system (SAPS) providers to propose alternative options, including demand-side response solutions or embedded generation and storage.

Identified need

CBTS supplies electricity to approximately 198,000 customers, which are primarily residential, followed by commercial and light industrial customers. The geographic area supplied by CBTS spans from Narre Warren in the north to Clyde in the south, and from Pakenham in the east to Carrum and Frankston in the west. Electricity demand in the CBTS service area has been amongst the fastest growing regions in Victoria and CBTS has reached its full capacity.

The summer peak demand at CBTS increased by 172 MVA between 2007-08 and 2019-20, equivalent to an average annual growth rate of 4.1 per cent. In 2019-20, the summer maximum demand on CBTS reached 470.6 MW (481.9 MVA). The maximum demand in summer 2023-24 was 492.2 MW (507.2 MVA), which is the highest annual maximum demand recorded to date. The 10 per cent and 50 per cent probability of exceedance (PoE) forecast summer maximum demands in 2024-25 are expected to reach 523 MVA and 486 MVA respectively.

The summer cyclic rating of CBTS with all plant in service is 553 MVA. This rating is expected to be exceeded in 2026-27 for the POE10, and in 2028-29 for the POE50. The summer cyclic rating of CBTS with one of its three transformers out of service, reduces to 369 MVA and this rating is expected to be exceeded every year from now.

The identified need is to maintain electricity supply reliability for customers in the CBTS supply area. Due to the strong demand growth in the area and the high utilisation of CBTS at maximum demand, the level of expected unserved energy (EUE) resulting from capacity limitations at CBTS is forecast to grow, deteriorating supply reliability for our customers. Addressing this identified need by reducing the EUE with a prudent level of investment in a network, non-network or SAPS solution, is expected to result in a net economic benefit to all those who produce, consume and transport electricity in the NEM. The need for this investment has been foreshadowed in the 2023 Transmission Connection Planning Report (TCPR)[1], published jointly by the Victorian DNSPs.

Potential credible options

The potentially credible options considered in this PSCR to address the identified need include:

- Option 1 - Do Nothing;
- Option 2 - Non-network or SAPS solution;
- Option 3 - Install fourth 220/66 kV transformer at CBTS;
- Option 4 - Install two 50 MVAR 66 kV capacitor banks;
- Option 5 - Establish two new 22 kV feeders to offload CBTS;

[1] Victorian Distribution Network Service Providers, "Transmission Connection Planning Report 2023" available at https://dapr.ausnetservices.com.au/ausnet_data/2023%20TCPR.pdf

- Option 6 - Establish a new 220/66 kV terminal station.

Initial analysis by AusNet and United Energy has identified that Option 3 is likely to be the preferred *network* option.

Submissions

AusNet and United Energy invites written submissions and enquires on the matters set out in this PSCR from Registered Participants, AEMO, interested parties, non-network and SAPS providers, and those registered on our demand side engagement registers.

All submissions and enquiries should be titled "*Cranbourne Supply Area RIT-T*" and directed to both:

Dasun De Silva (AusNet)

Manager Transmission and Sub-transmission Planning

Email: dasun.desilva@ausnetservices.com.au

Richard Robson (United Energy)

Manager Sub-transmission Planning and Major Connections

Email: ricrobson@powercor.com.au

The consultation on this PSCR is open for 12 weeks. Submissions are due on or before 10th January 2025.

Submissions will be published on the Australian Energy Market Operator (AEMO), AusNet and United Energy websites. If you do not wish for your submission to be published, please clearly stipulate this at the time of lodging your submission.

Next steps

Following conclusion of the PCSR consultation period, AusNet and United Energy will, having regard to any submissions received on the PSCR, prepare and publish a project assessment draft report (PADR) including:

- A summary of, and commentary on, the submissions on the PSCR;
- A detailed market benefit assessment of the proposed credible options to address the identified need; and
- Identification of the proposed preferred option to meet the identified need.

Publication of that report will trigger the second stage of consultation. AusNet and United Energy intend on publishing the PADR in early 2025.

1. Introduction

The regulatory investment test for transmission (RIT-T) is an economic cost-benefit test used to assess and rank potential investments capable of meeting the identified need. The purpose of the RIT-T is to identify the credible option that maximises the present value of net economic benefit to all those who produce, consume and transport electricity in the National Electricity Market (NEM) (the preferred option).

This project specification consultation report (PSCR) is the first stage of the *Cranbourne Supply Area RIT-T* consultation process and has been jointly prepared by AusNet and United Energy in accordance with the requirements of clause 5.16 of the National Electricity Rules (NER) version 214.

The structure of this PSCR is as follows:

- **Chapter 2** describes the identified need that AusNet and United Energy are seeking to address, which is in relation to the Cranbourne Terminal Station capacity limitations;
- **Chapter 3** outlines the proposed assessment method and assumptions made in identifying the need;
- **Chapter 4** outlines the technical characteristics that a non-network option would be required to deliver to address the identified need;
- **Chapter 5** describes the options that AusNet and United Energy consider could potentially address the identified need;
- **Chapter 6** Invites registered participants, AEMO, interested parties, non-network and SAPS providers, and persons on the AusNet and United Energy demand side engagement registers, to make a formal written submission on this PSCR.

The need for investment has been foreshadowed in the 2023 Transmission Connection Planning Report (TCPR)[2], published jointly by the Victorian DNSPs.

[2] Victorian Distribution Network Service Providers, "Transmission Connection Planning Report 2023" available at https://dapr.ausnetservices.com.au/ausnet_data/2023%20TCPR.pdf

2. Description of the identified need

This chapter discusses the role of Cranbourne Terminal Station (CBTS) in providing electricity network services and the identified need associated with its current and forecast capacity limitations. Quantification of the risk and costs associated with the forecast increase in Expected Unserved Energy (EUE) for the status-quo is also presented.

2.1. Cranbourne supply area

CBTS is the only terminal station that supplies the Cranbourne area and its surrounds. CBTS was originally established with two 150 MVA 220/66 kV transformers as a new terminal station in 2005 to reinforce the electricity network for the Cranbourne supply area, serviced by East Rowville Terminal Station (ERTS) at the time. In 2009, a third 150 MVA 220/66 kV transformer was commissioned at CBTS to supply further growth of electricity demand in the area which has now materialised.

The geographic area supplied by CBTS spans from Narre Warren in the north to Clyde in the south, and from Pakenham in the east to Carrum and Frankston in the west, as shown in Figure 1. CBTS supplies the AusNet and United Energy distribution networks with a split of 61 per cent and 39 per cent respectively, based on annual energy consumption.

Figure 1: Cranbourne terminal station (CBTS) supply area

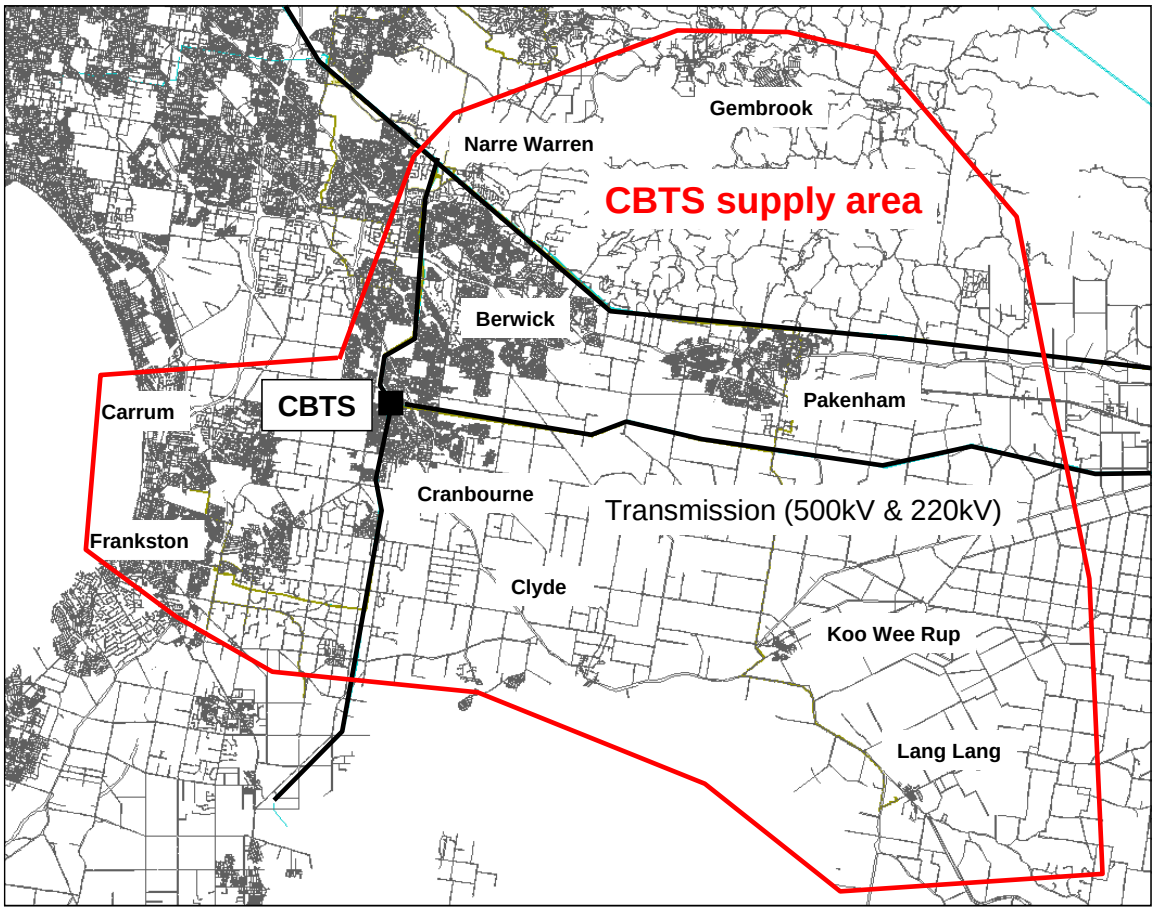

2.1.1. Customer demand for electricity

More than 198,000 customers rely on CBTS for their electricity supply. Growth in customer numbers in the supply area has been substantial. Customer number growth has averaged 5,600 additional customers per annum since 2014, an average annual increase of 3.6 per cent.

Residential customers consume 49.5 per cent of the total annual energy supplied from CBTS as illustrated in Table 1. This is closely followed by commercial customers, consuming 42.1 per cent of the total annual energy supplied.

Table 1: CBTS net energy consumption composition

CUSTOMER TYPE	SHARE OF CONSUMPTION (%)
Commercial	42.1
Residential	49.5
Industrial	6.1
Agricultural	2.4
Total	100

CBTS is a summer-peaking terminal station. Electricity demand in the CBTS supply area has been amongst the fastest growing regions in Victoria and this is directly related to the strong growth in customer numbers within the supply area and high penetration of air-conditioning. The summer peak demand at CBTS has increased by 172 MVA between 2007-08 and 2019-20, equivalent to an average annual growth rate of 4.1per cent. In 2019-20 the summer maximum demand on CBTS reached 470.6 MW (481.9 MVA). The maximum demand in summer 2023-24 was 492.2 MW (507.2 MVA), which is the highest annual maximum demand recorded to date. The 10 per cent and 50 per cent probability of exceedance (PoE) forecast summer maximum demands in 2024-25 are expected to reach 523 MVA and 486 MVA respectively.

2.1.2. Electricity network servicing the supply area

CBTS currently has three parallel 150 MVA 220/66 kV transformers and three 66 kV buses. A simplified single line diagram of CBTS is provided in Figure 2. The summer cyclic rating of CBTS with all plant in service is 553 MVA and 540 MVA at a 35°C and 40°C ambient temperatures respectively. The summer cyclic rating of CBTS with one of its three transformers out of service, reduces to 369 MVA and 360 MVA at a 35°C and 40°C ambient temperatures respectively.

Figure 2: CBTS existing transmission connection assets single line diagram

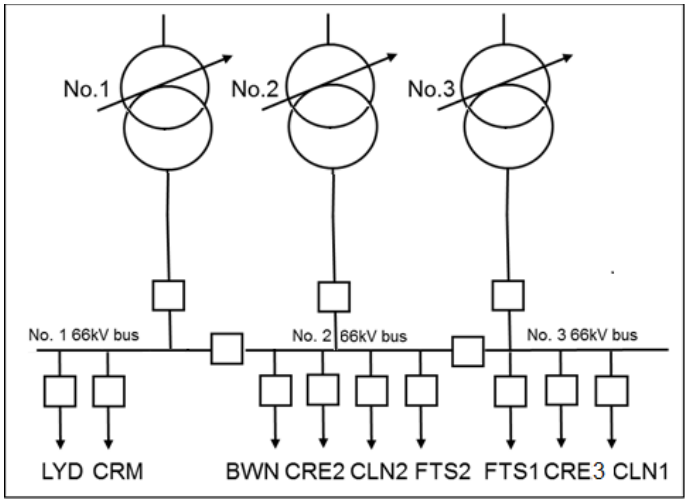

CBTS has nine 66 kV sub-transmission line exits supplying eight AusNet zone substations, Cranbourne (CRE), Lysterfield (LYD), Narre Warren (NRN), Pakenham (PHM), Officer (OFR), Berwick North (BWN), Lang Lang (LLG) and Clyde North (CLN), and three United Energy zone substations, Carrum (CRM), Langwarrin (LWN) and Frankston (FTN) in a loop via Frankston Terminal Station (FTS), which is only a 66 kV switching station with no transformation capacity. This is shown schematically in Figure 3.

Figure 3: CBTS existing sub-transmission network schematic diagram

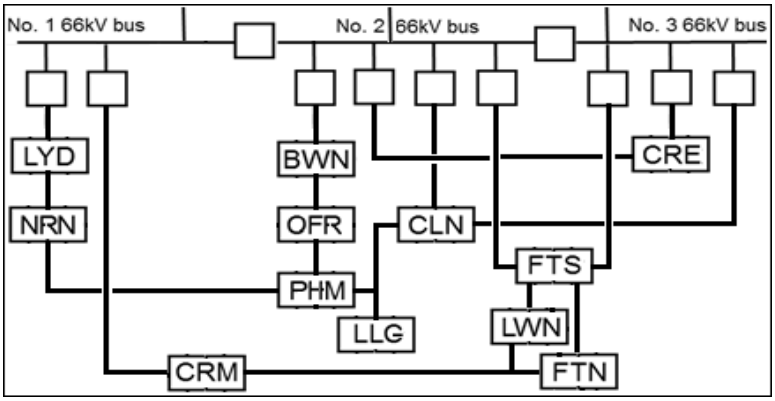

2.2. Identified need

The identified need is to maintain electricity supply reliability for customers within the Cranbourne supply area. Due to maximum demand growth in the area and high utilisation of CBTS, supply reliability is forecast to deteriorate, resulting in increased levels of EUE for customers supplied from the CBTS transmission connection assets. Addressing this identified need will result in an increase in the producer and consumer surplus (a net economic benefit to all those who produce, consume and transport electricity in the NEM) by reducing the cost of EUE by more than the preferred option's implementation and ongoing operating and maintenance costs. There are two drivers of EUE at CBTS - a lack of "N" capacity (with all plant in service), and a lack of "N-1" capacity (with one transformer out of service). Table 2 summarises the forecast "N" system normal limitations at CBTS.

Table 2: CBTS capacity limitations (EUE for "N" condition)

YEAR[3]	POE10		POE50		PROBABILITY WEIGHTED[4]	
	Load-at-risk (MVA)	Hours-at-risk (hr)	Load-at-risk (MVA)	Hours-at-risk (hr)	EUE (MWh)	EUE Cost ($ million)
2024	0.0	0	0.0	0	0.0	0.00
2025	0.0	0	0.0	0	0.0	0.00
2026	0.9	0	0.0	0	0.0	0.00
2027	19.1	9	0.0	0	12.6	0.48
2028	40.7	17	0.0	0	105.8	4.02
2029	63.9	25	6.6	1	247.9	9.41
2030	85.0	29	25.0	2	427.3	16.22
2031	106.3	34	44.5	4	656.1	24.91
2032	128.8	38	66.7	9	966.2	36.68
2033	150.0	46	88.0	18	1,398	52.76

[3] Financial year ending 30th June.

[4] 30% weighting applied on the POE10 EUE, and 70% weighting applied on the POE50 EUE, also considering the risk reduction provided by the available distribution feeders load transfer capabilities.

There is forecast to be insufficient capacity to supply the growing demand at CBTS from 2026-27 under system normal ("N") operating conditions for a POE10 maximum demand. The station "N" rating is expected to be reached under a POE50 forecast from summer 2028-29. Load transfers to manage the "N" load-at-risk become exhausted from 2026-27, providing an EUE in that summer of approximately 12.6 MWh. This EUE is estimated to have a value to consumers of around $0.48 million (real, 2024). The risk rises rapidly thereafter with an EUE in 2032-33 of approximately 1,398 MWh with a value of $52.76 million (real, 2024).

Table 3 provides a summary of the forecast "N-1" contingency condition capacity limitations at CBTS (i.e., excluding the "N" system normal limitations presented above).

Table 3: CBTS capacity limitations (EUE for "N-1" condition)

YEAR[5]	POE10		POE50		PROBABILITY WEIGHTED[6]	
	Load-at-risk (MVA)	Hours-at-risk (hr)	Load-at-risk (MVA)	Hours-at-risk (hr)	EUE (MWh)	EUE Cost ($ million)
2024	146.7	95	105.0	50	6.5	0.25
2025	162.8	147	117.1	63	8.8	0.34
2026	180.0	233	134.8	101	13.5	0.51
2027	180.0	353	151.6	169	22.5	0.85
2028	180.0	496	171.4	270	34.1	1.29
2029	180.0	648	184.0	381	51.4	1.95
2030	180.0	817	184.0	497	72.9	2.77
2031	180.0	992	184.0	621	97.6	3.71
2032	180.0	1,201	184.0	773	129.5	4.92
2033	180.0	1,408	184.0	955	167.5	6.36

The historical and forecast maximum demand under a transformer outage scenario ("N-1") has exceeded the rating of CBTS since 2011-12, with levels of "N-1" load-at-risk during peak loading periods reaching the full transformer capacity of 180 MVA from 2025-26 for a POE10 forecast maximum demand. For an outage of one 220/66 kV transformer at CBTS, there will be insufficient capacity at this terminal station to supply all demand at the POE10 forecast maximum demand for about 95 hours in 2024-25, and 50 hours for the POE50 forecast maximum demand.

The probability of a major transformer outage is very low, with a network average of 1.0 per cent per transformer per annum applied for this assessment, contributing to an expected unavailability per transformer per annum of 0.22 per cent. When the energy-at-risk is weighted by this low unavailability, and emergency load transfer capability is considered, the EUE is estimated to be around 8.8 MWh in 2024-25. This EUE is estimated to have a value to consumers of around $0.34 million (real, 2024). By 2032-33, this increases to 167.5 MWh and $6.36 million (real, 2024).

The estimates of EUE and its financial value assumes a 70 per cent weighting of moderate temperatures (POE50) occurring in each year, and a 30 per cent weighting of higher temperature conditions (POE10), using a location-specific value of customer reliability (VCR) of $37,960/MWh.

The key elements of the "Do Nothing" supply reliability risk under the status-quo are shown in Figure 4 for both "N" and "N-1" conditions, ignoring the effects of available load transfer capability.

[5] Financial year ending 30th June.

[6] 30% weighting on POE10 EUE and 70% weighting on POE50 EUE, also considering the risk reduction provided by the combined available distribution and sub-transmission load transfer capabilities.

Figure 4: CBTS EUE risk costs (ignoring the effects of available load transfer capability)

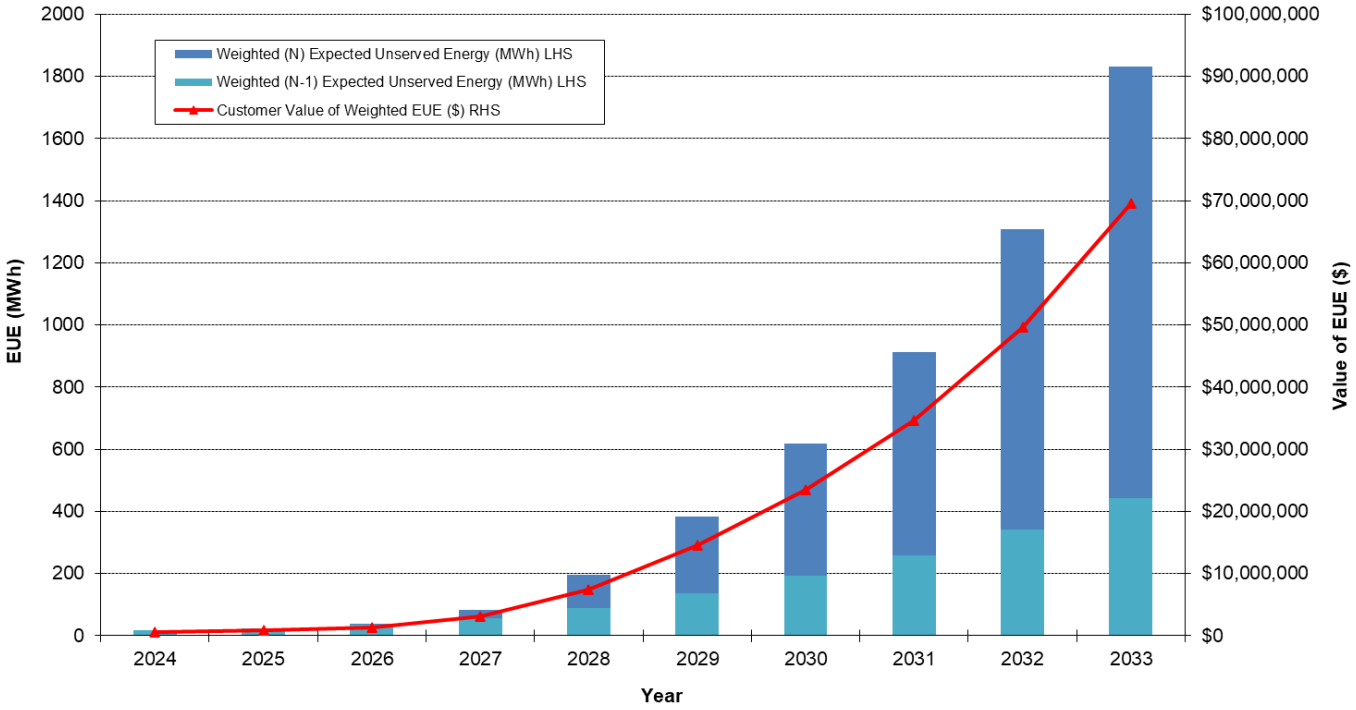

It is acknowledged that CBTS has load transfer capability available at both the 22 kV distribution feeder level and at the 66 kV sub-transmission level. This capability allows AusNet and United Energy to manage risk in the short-term, by transferring load away from CBTS to surrounding terminal stations using spare capacity available through each distribution network.

Considering this available load transfer capability, the reduced supply reliability risks are shown in Figure 5 for both "N" and "N-1" conditions. This reduction in risk provided by the load transfer capability effectively delays the timing of other credible options by one to two years.

Figure 5: CBTS EUE risk costs (including the effects of available load transfer capability)

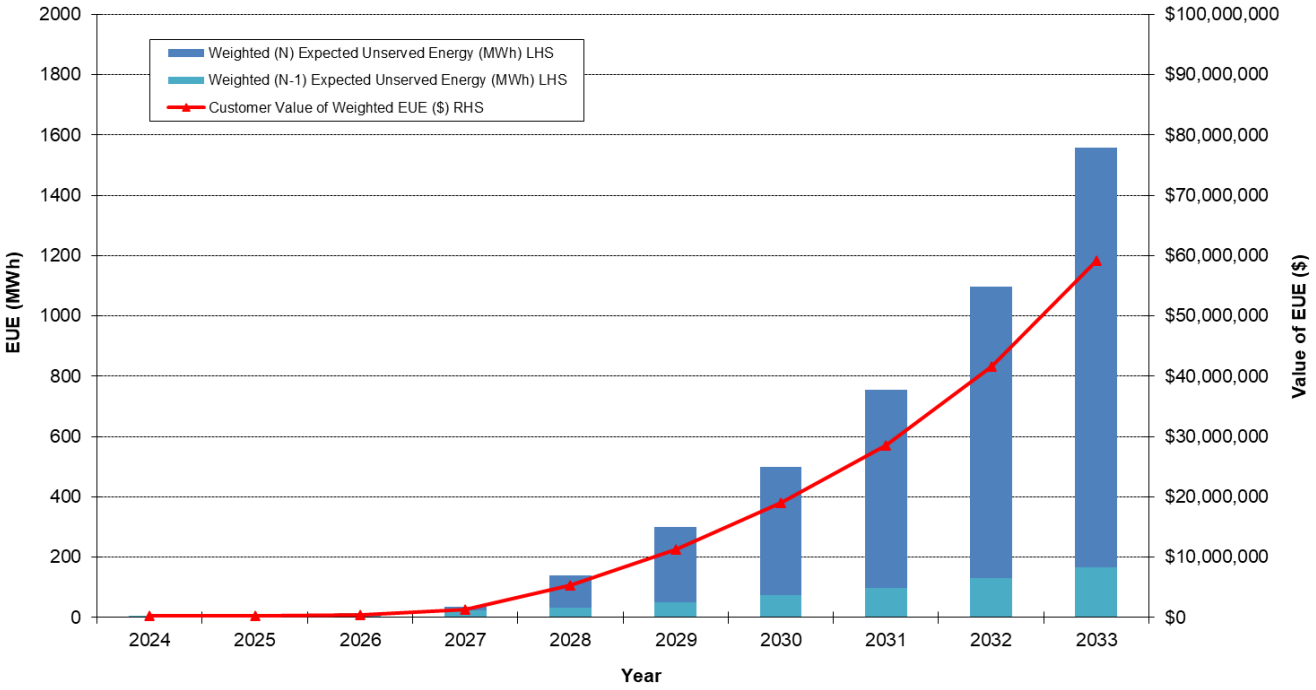

It can be seen in both cases that it is the EUE associated with the "N" capacity of CBTS that is driving the bulk of the risk cost in the latter years.

By undertaking one of the options identified in this RIT-T, AusNet and United Energy will be able to avoid this projected deterioration in supply reliability for the Cranbourne supply area.

3. Assumptions used in identifying the identified need

This chapter details the assumptions used in identifying the identified need and the proposed assessment method.

3.1. Assessment method

Consistent with the RIT-T NER requirements and RIT-T Application Guidelines, AusNet and United Energy will undertake a cost-benefit analysis to evaluate and rank the net economic benefits of credible options. All options considered will be assessed against a status-quo case where no proactive capital investment to reduce the increasing baseline risks is made. The optimal timing of an investment option is the year when the annual benefits from implementing the option become greater than the annualised investment costs.

In planning the network, AusNet and United Energy apply a probabilistic planning approach that balances reliability risk with the cost of potential risk mitigation options to identify the credible option that maximises the present value of net economic benefit to all those who produce, consume and transport electricity in the NEM (the preferred option).

The probabilistic planning approach estimates the service level risk of identified network limitations by combining:

- the impact (consequence) of network limitations under various conditions; and
- the likelihood of those limits being reached, considering the combined probabilities of relevant demand, generation and network availability forecasts eventuating.

Service level reliability risk is monetised as the product of:

- expected unserved energy (EUE) driven by the identified capacity limitations, in MWh per annum; and
- the locational value of customer reliability (VCR), in $/MWh.

The credible option that maximises the present value of net economic benefit is identified by:

- combining the avoided service level reliability risk of each credible option and that option's implementation and ongoing costs for each year; and
- identifying the credible option with the highest present value of total avoided service level reliability risk less the implementation and ongoing operating the maintenance costs.

The optimal timing of this preferred option is identified by:

- calculating the preferred option's annualised implementation and ongoing costs; and
- selecting the year when the annual value of the avoided service level risk exceeds this annualised cost.

Application of the probabilistic planning approach often leads to the deferral of action that would otherwise proceed under a deterministic planning standard. Under a probabilistic network planning approach, conditions often exist where some of the load cannot be supplied under rare (but credible) conditions, such as at maximum demand or with a single network element out of service.

3.2. Input assumptions

The key assumptions used in this PSCR apply to the:

- network asset ratings;
- maximum demand growth;
- load transfer capability;
- annual load profile;
- network asset reliability (failure rates, repair times) information;
- value of customer reliability; and
- discount rate.

3.2.1. Network asset ratings

The capability of the transmission connection assets at CBTS is limited by the thermal rating of its three parallel 220/66 kV 150 MVA transformers. Table 4 provides a summary of the capability of CBTS for "N" and "N-1" conditions during summer and winter (maximum demand) seasons.

Table 4: CBTS thermal capacity ratings (MVA)

SEASON	EXISTING		POST OPTION 3	
	"N"	"N-1"	"N"	"N-1"
Summer 35 Degrees Celsius	553	369	369 B12 369 B34	553
Summer 40 Degrees Celsius	540	360	360 B12 360 B34	540
Winter 15 Degrees Celsius	630	413	413 B12 413 B34	630

3.2.2. Forecast maximum demand

The forecast maximum demand at CBTS is specified according to its 10 per cent probability of exceedance (POE10) and its 50 per cent probability of exceedance (POE50) during summer and winter periods[7]. Table 5 provides a summary of the forecast maximum demand for CBTS during summer and winter (maximum demand) seasons.

Table 5: CBTS forecast maximum demand (MVA)

YEAR[8]	MAXIMUM DEMAND SEASON AND POE			
	Summer POE10	Winter POE10	Summer POE50	Winter POE50
2024	506.7	441.8	474.0	419.8
2025	522.8	463.5	486.1	441.4
2026	540.9	486.9	503.8	464.9
2027	559.1	512.6	520.6	489.4
2028	580.7	536.8	540.4	513.0
2029	603.9	560.1	559.6	536.1
2030	625.0	582.8	578.0	558.2
2031	646.3	602.5	598.5	578.0
2032	668.8	624.2	619.7	599.3
2033	690.0	645.9	641.0	620.9

[7] Victorian electricity demand is sensitive to ambient temperature. Maximum demand forecasts are therefore based on expected demand during extreme temperature that could occur once every ten years (POE10) and during average conditions that could occur every second year (POE50).

[8] Financial year ending 30th June for summer demands. Calendar year ending 31st December for winter demands.

Figure 6 shows the POE10 and the POE50 forecasts maximum demand for CBTS during summer periods relative to its capacity.

Figure 6: Summer period maximum demand forecasts for CBTS

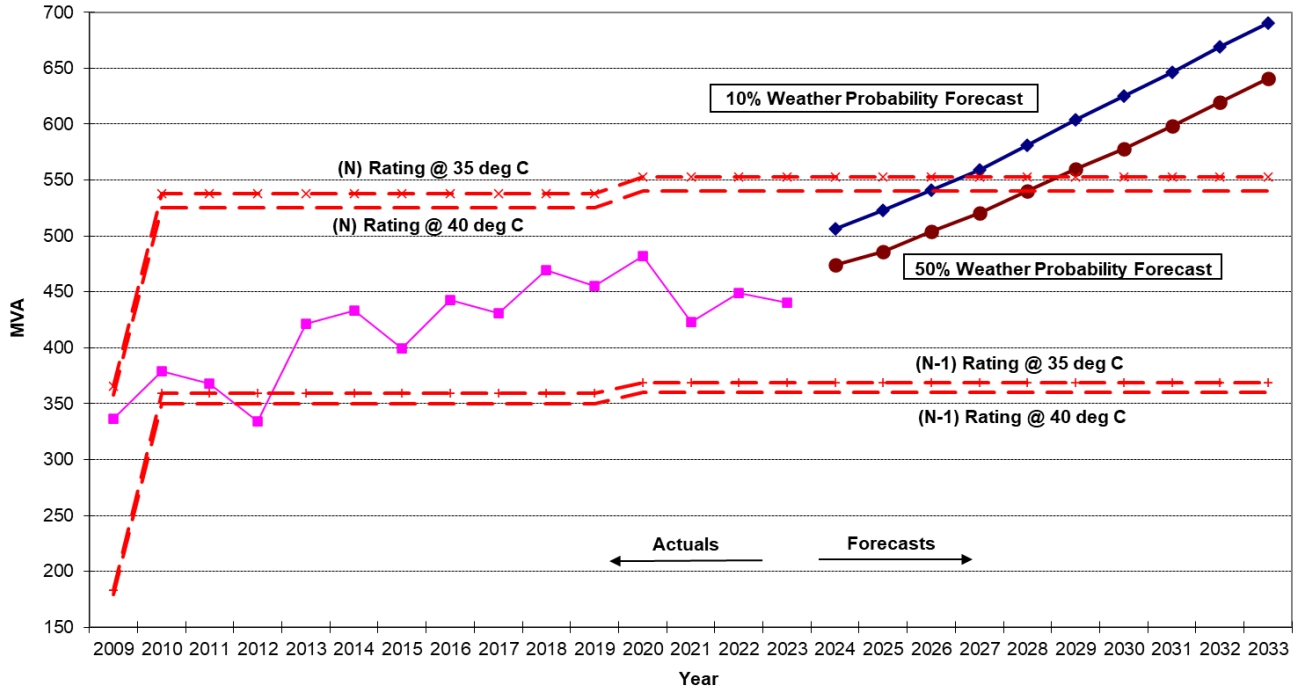

Figure 7 shows the POE10 and the POE50 forecast maximum demand for CBTS during winter periods relative to its capacity.

Figure 7: Winter period maximum demand forecasts for CBTS

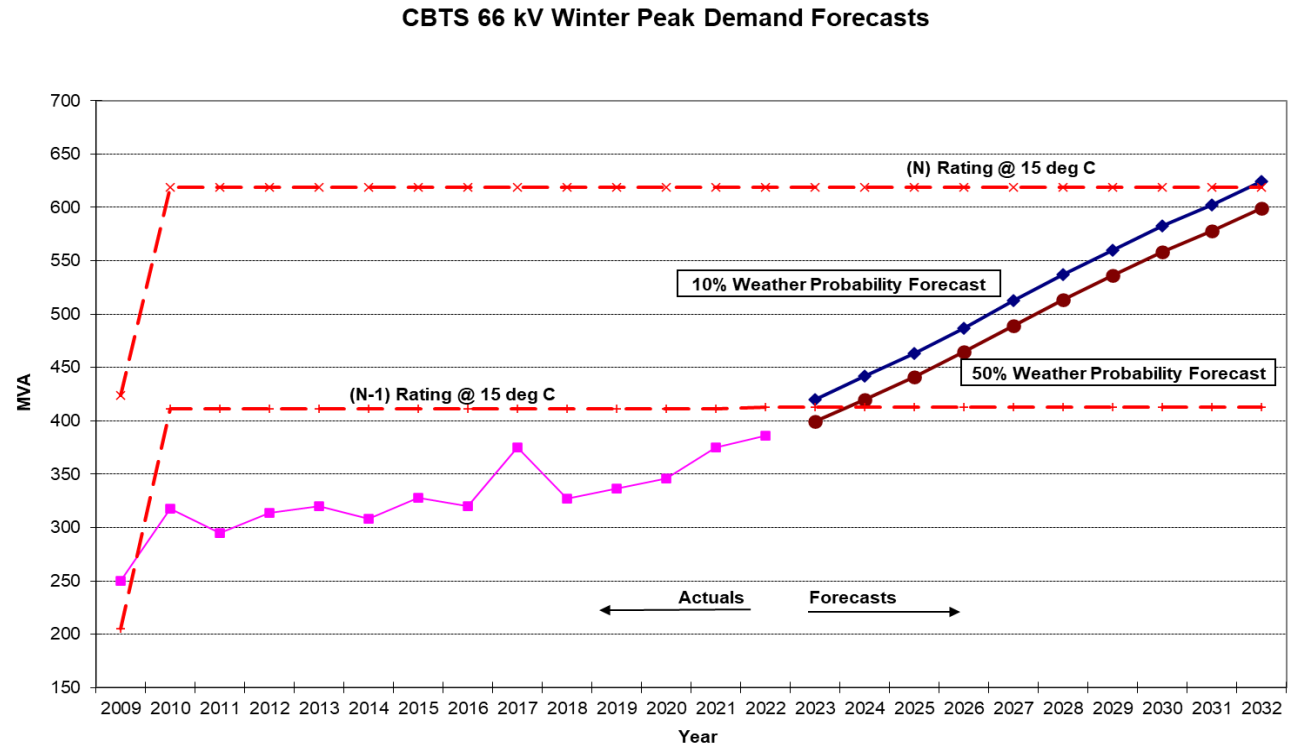

The maximum demand growth in the CBTS supply area is primarily due to the following:

- staged development of residential estates and other residential subdivisions; commercial developments, such as shopping centres, childcare centres, schools, medical centres and retail hubs, associated with new large residential developments; and development of light industrial areas; and
- electrification of gas and transport sectors of society, associated with the energy transition.

The maximum demand forecasts used in this PSCR were prepared in late 2023.

3.2.3. Load transfer capability

Based on the present POE10 maximum demand, there is the capacity to transfer 81 MVA of load to East Rowville Terminal Station (ERTS) via the sub-transmission network without overloading ERTS. It does present significant operational risks though because it would require AusNet to split its meshed sub-transmission network into radial lines and would therefore only be utilised to manage the risk of an "N-1" post-contingency overload at CBTS. That is, an interruption to supply will occur before the transfer can be enacted. To manage "N" overload risk at CBTS, there is 35 MVA of 22 kV distribution feeder transfers available on the AusNet distribution network from CBTS to ERTS.

Furthermore, there is the capacity to transfer 100 MVA of load to Tyabb Terminal Station (TBTS) and 79 MVA to Heatherton Terminal Station (HTS) via the sub-transmission network without overloading TBTS and HTS. Again, it presents significant operational risks because it would require United Energy to split its meshed sub-transmission network into radial lines and would therefore only be utilised to manage the risk of an "N-1" post-contingency overload at CBTS. To manage "N" overload risk at CBTS, there is 35 MVA of 22 kV distribution feeder transfers available on the United Energy distribution network from CBTS – 2 MVA to ERTS, 9 MVA to HTS and 24 MVA to TBTS.

The total combined 22 kV distribution feeder transfer capability to manage the "N" risk in 2024-25 is forecast to be 70 MVA. This is limited by the peak utilisation on the adjacent distribution feeders providing the transfer capacity and will therefore deteriorate over time as utilisation on these feeders increase.

The total combined 66 kV sub-transmission line transfer capability to manage the "N-1" post-contingency risk in 2024-25 is forecast to be 260 MVA. This is limited by the ratings of the sub-transmission lines providing the transfer capacity.

Table 6 provides a summary of the forecast load transfer capability away from CBTS to minimise EUE.

Table 6: CBTS available transfer capability (MVA)

YEAR[9]	LOAD TRANSFER CAPABILITY (MVA)	
	Distribution to manage "N" risk	Sub-Transmission to manage "N-1" risk[10]
2025	70.0	260
2026	53.9	260
2027	37.8	260
2028	21.7	260
2029	5.6	260
2030	0.0	260
2031	0.0	260
2032	0.0	260
2033	0.0	260
2034	0.0	260

3.2.4. Annual load profile

In calculating annual load profiles, consideration is made of underlying load and embedded generation contributions to the net load profile as observed at CBTS in the following charts. Underlying load is used as the basis on which to calculate EUE for this report.

[9] Financial year ending 30th June.
[10] Sub-transmission level transfers are only available for use under "N-1" post-contingency conditions due to topology limitations within the sub-transmission networks. Therefore, an outage will be experienced prior to implementing the transfers.

The load-duration curves for CBTS over several recent years are shown in Figure 8 for peak demand periods, and in Figure 9 for the entire year.

Figure 8: Load-duration profile for CBTS – peak demand

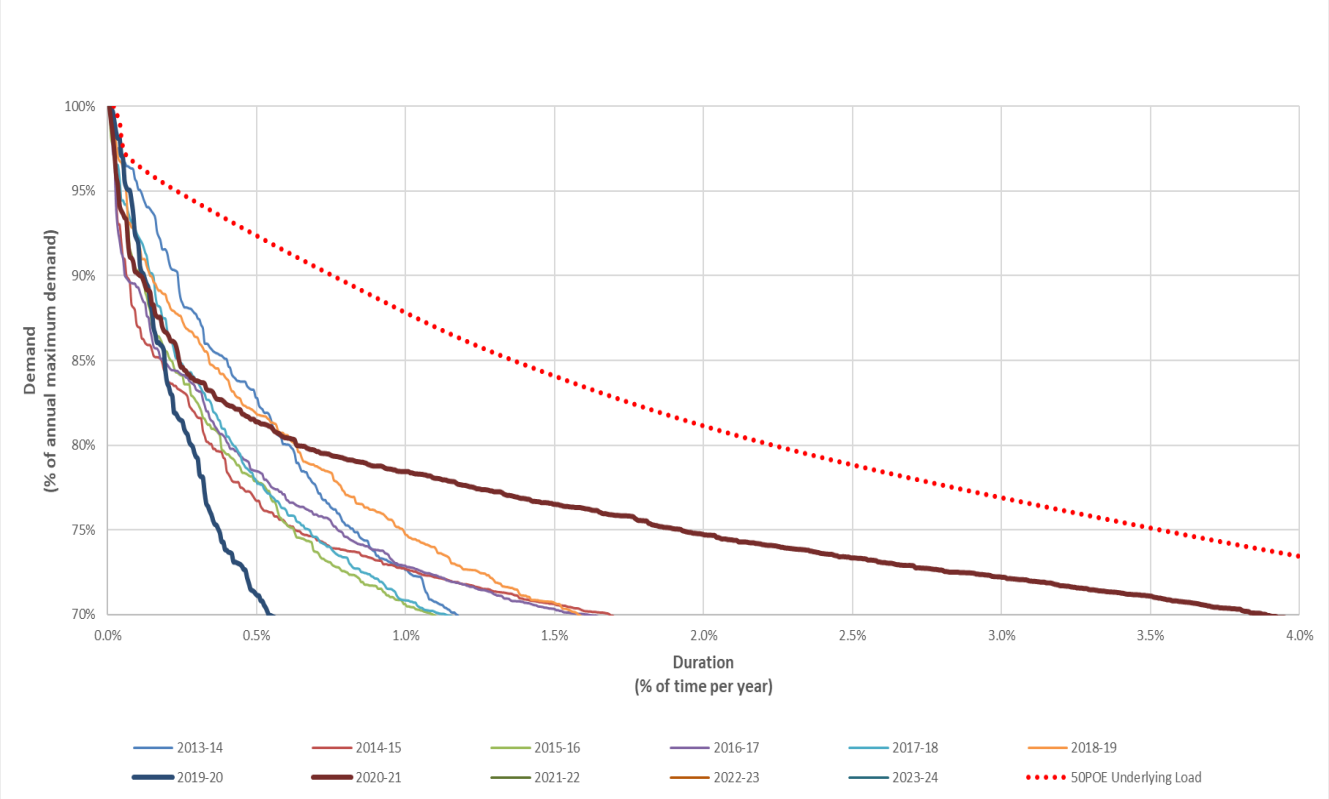

The shape of the curves in Figure 8 are strongly influenced by the coincidence of extreme ambient temperature on working weekdays and the number of times this occurs in any one year. This is illustrated in the largest differences observed between the 2020-21 and 2019-20 summers.

Figure 9: Load-duration profile for CBTS – annual

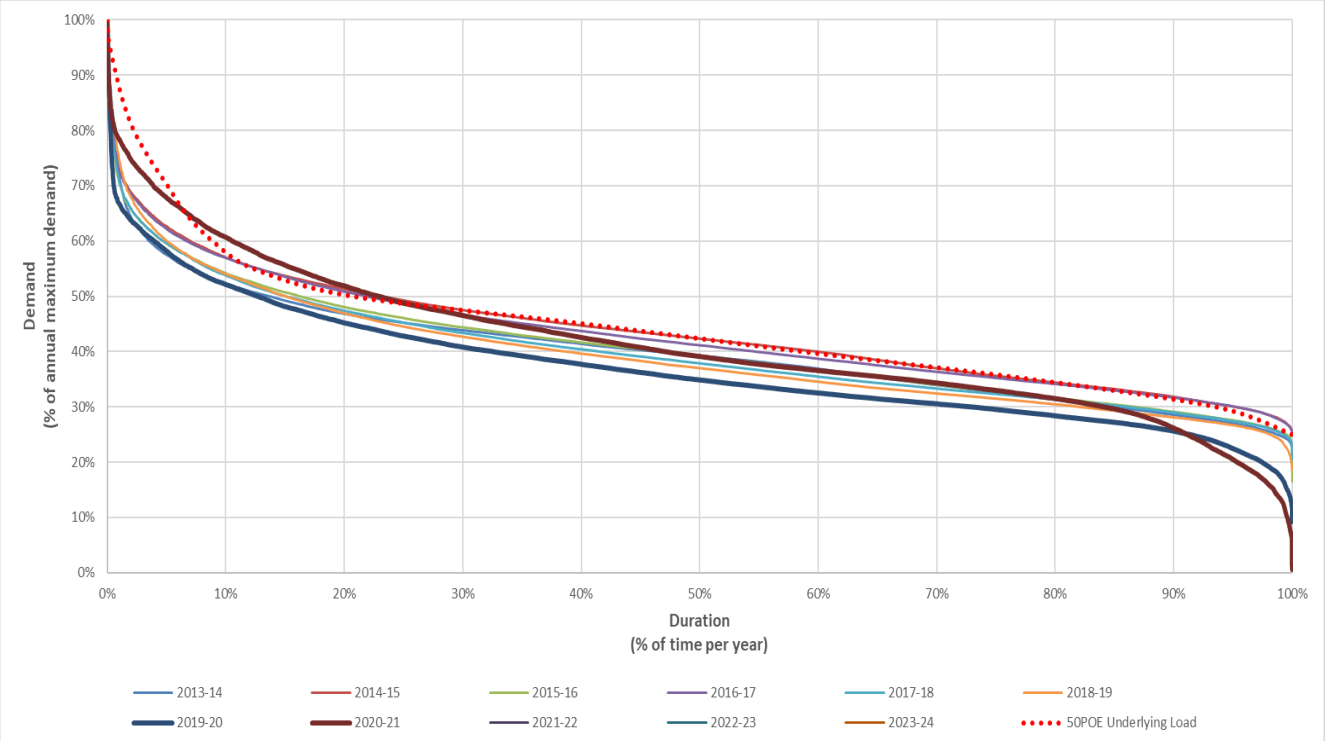

The shape of the net load curves in Figure 9 is influenced by the level of distributed roof-top PV, with more recent years tapering off rapidly (sharper peak, lower trough) compared to the more historical summers, and compared with the underlying load estimate.

Approximately 202.9 MW of rooftop solar PV is now installed on the AusNet distribution system and about 63.1 MW of rooftop solar PV is installed on the United Energy distribution system connected to CBTS. This includes all the residential and small commercial rooftop PV systems smaller than 1 MW.

The typical net daily load profiles at CBTS during the summer season are shown in Figure 10.

Figure 10: Daily load profile for CBTS (summer season)

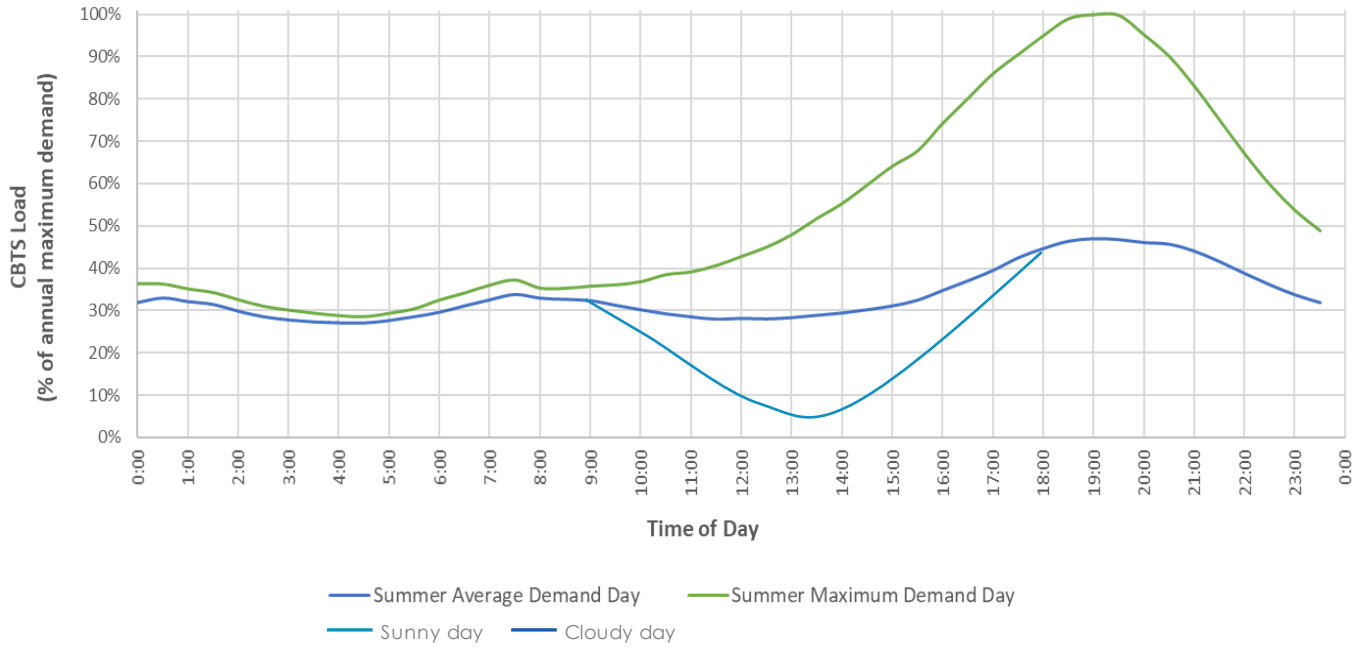

3.2.5. Network asset reliability

Table 7 provides a summary of the CBTS transformer reliability information used in the EUE analysis.

Table 7: CBTS transformer reliability information

POWER TRANSFORMER	VALUE	INTERPRETATION
Major forced outage rate (failure rate)	1.0% per annum	A major outage is expected to occur once per 100 transformer-years. In a population of 100 terminal station transformers, expect one major failure of any one transformer per year.
Weighted average of major outage duration (repair time)	2.6 months	On average, 2.6 months is required to return the transformer to service, during which time the transformer is not available for service.
Expected transformer unavailability due to a major outage per transformer-year	0.217%	On average, each transformer would be expected to be unavailable due to major outages for 0.01 x 2.6/12 = 0.217% of the time, or 19 hours per year.

3.2.6. Value of customer reliability

The cost of EUE is calculated using a value of customer reliability (VCR), which is an estimate of the value electricity consumers put on having a reliable electricity supply. AusNet and United Energy have applied locational VCR values based on the Australian Energy Regulator's (AER) Values of Customer Reliability Review published in December 2019. Applying the AER's sector (residential, commercial, industrial and agricultural) VCRs (escalated by CPI to 2024) to terminal station level historical energy composition data from 2022-23, a CBTS VCR of $37,960/MWh was derived, as presented in Table 8.

Table 8: CBTS value of customer reliability

SECTOR	AER VCR ($/MWH)[11]	CBTS ENERGY CONSUMPTION BY SECTOR	CBTS WEIGHTED VCR ($/MWH)
Residential	23,840 [12]	49.5%	11,790
Agricultural	42,140	2.4%	990
Commercial	49,540	42.1%	20,850
Industrial	70,980	6.1%	4,330
Composite		**100%**	**37,960**

3.2.7. Discount rate

It is necessary to apply a discount rate to estimate the present value of future costs and benefits.. A real, 4.2 per cent, which is the regulated weighted average cost of capital (WACC) at CBTS, has been applied as the central assumption to the cost-benefit assessments presented in this report.

The discount rate used in AEMO's 2023 inputs, assumptions and scenarios report[13] will be used in the scenario assessments to test the sensitivities in the Project Assessment Draft Report.

[11] AER 2019 published VCRs are escalated by CPI to 2024 dollars.

[12] Climate zone 6 applies at CBTS.

[13] 2023 Inputs, Assumptions and Scenarios Report, Table 31, AEMO July 2023.

4. Technical characteristics of the identified need

This chapter outlines the technical characteristics of the identified need that a non-network or SAPS option would be required to deliver in the form of network support services, to alleviate the forecast capacity limitations at CBTS. It also presents the probability weighted annualised cost of those limitations without an identified credible option in place. This annualised cost represents the maximum fee that AusNet and United Energy (combined), could pay to a network support proponent for addressing the identified need.

4.1. Performance requirements

Initial analysis by AusNet and United Energy has identified that, Option 3 is likely to be the preferred *network* option with an annualised cost of $2.3 million (real, 2024) which represents the maximum available annual payment that is available to non-network or SAPS providers (in aggregate) for a network support option.

Based on the results of Table 2 and Table 3 combined, the EUE risk exceeds the annualised cost of the preferred *network* option in the summer of 2027-28, which represents the latest date that a network support service needs to be in place to defer the preferred *network* option.

As a minimum, a network support option needs to be able to defer the preferred *network* option by at least one year. To achieve this, the network support option must *maintain (or reduce)* the EUE from one year to the next, for the duration of the network support agreement. To be eligible for the maximum available annual payment, the network support option must *reduce* the EUE by at least the same amount as that of the preferred *network* option.

The minimum amount of network support that AusNet and United Energy are seeking from a non-network or SAPS option by summer 2027-28, is 21.6 MW[14]. It should however be noted that for this level of support, the amount a network support provider could claim is very little since the residual cost of EUE would only be marginally below the annualised deferral cost of the preferred *network* option.

To claim the majority of the maximum available annual payment from summer 2027-28, a network support option will be required to mitigate all load at risk for POE10 in Table 2. This pre-contingent requirement is forecast to increase from 40.7 MW for 17 hours in 2027-28 up to 150.0 MW for 46 hours by 2032-33.

To claim all of the maximum available annual payment from summer 2027-28, a network support option will be required to mitigate all of the load at risk for POE10 in Table 2 pre-contingent (as above), as well as mitigate up to 180 MW of load at risk for post-contingent services as detailed in Table 3.

The maximum demand load curve in Figure 10 shows that the demand at CBTS typically remains high between 4:00pm and 9:30pm. Any pre-contingent network support solution will therefore typically need to be capable of operating continuously over this period, until the demand declines. Any post-contingent network support solution will need to be capable of operating continuously, during high demand periods where there is insufficient spare capacity in neighbouring distribution feeders, until the faulted asset is repaired or replaced, or the demand declines.

[14] 40.7 MVA in 2028 – 19.1 MVA in 2027 = 21.6 MW assuming unity power factor.

4.2. Submission requirements

Non-network and SAPS service providers interested in providing submissions to alleviate the network limitations outlined in this PSCR are advised to begin engagement with AusNet and United Energy as soon as possible. A detailed proposal including the information listed below should be submitted by the requested date. Details required include:

- Name, email address and other contact details of the person making the submission.
- ABN and contact details of the business seeking to contract with us for network support services.
- A detailed description of services to be provided including:
    - Size (MW/MVA)
    - Location(s)
    - Frequency and duration
    - Type of action or technology proposed
    - Proposed dispatching arrangement
    - Availability and reliability performance details
    - Period of notice required to enable the non-network support
    - Proposed contract period and staging (if applicable)
    - Proposed timing for delivery (including timeline to plan and implement).
- High-level electrical layout of the proposed site (if applicable).
- Evidence and track record proving capability and previous experience in implementing and completion of projects of the same type as the proposal.
- Preliminary assessment of the proposal's impact on the EUE network limitations.
- Breakdown of lifecycle cost for providing the service, including:
    - Capital costs (if applicable)
    - Annual operating (i.e. set up and dispatch fees) and maintenance costs
    - Other costs (e.g. availability, project establishment, integration etc.)
    - Tariff assumptions
    - Expected annual payment for providing the non-network solution.
- A method outlining measurement and quantification of the agreed service, including integration of the proposed solution with the network.
- A financial and service performance risk assessment to manage potential risks of non-delivery of service.
- A statement outlining that the non-network service provider is prepared to enter into a Network Support Agreement (NSA) (subject to agreeing terms and conditions).
- Letters of support from partner organisations.
- Any special conditions to be included in an NSA.

All proposals must satisfy the requirements of any applicable laws, rules and the requirements of any relevant regulatory authority, including following the normal network connection processes where applicable. Any network reinforcement costs required to accommodate the non-network or SAPS solution, or any reliability penalties relating to non-delivery of service, will typically be borne by the proponent of the non-network or SAPS solution.

For further details on AusNet and United Energy processes for engaging and consulting with non-network and SAPS service providers, and for investigating, developing, assessing and reporting on non-network or SAPS options as alternatives to network augmentation, please refer to the Demand Side Engagement Strategy and other relevant demand management documentation at the links below.

1. AusNet Demand Side Engagement Strategy.
2. United Energy Demand Side Engagement Document.

5. Description of all potential credible options

This chapter lists and describes options that AusNet and United Energy consider may be capable of meeting the identified need.

The potentially credible options considered to address the identified need include:

- Option 1 – Do nothing
- Option 2 – Non-network or SAPS solution;
- Option 3 - Install fourth 220/66 kV transformer at CBTS;
- Option 4 - Install two 50 MVAR 66 kV capacitor banks;
- Option 5 – Establish two new feeders to offload CBTS;
- Option 6 – Establish a new 220/66 kV terminal station.

5.1. Option 1 – Do nothing

The "Do-nothing" option involves continuing to supply customers serviced by CBTS without any intervention to manage EUE. This is expected to lead to significant supply interruptions and unserved energy under both "N" (system normal) and "N-1" (single contingency) conditions at times of peak demand.

As detailed in Table 2 and Table 3 for the EUE reliability risk associated with the "N" and "N-1" conditions respectively, the total combined value of the EUE risk associated with the "Do nothing" option as shown in Figure 5, is forecast to increase from $0.34 million in 2024-25 to $5.31 million in 2027-28, to $59.1 million by 2032-33 (real, 2024).

In the context of this RIT-T, the "Do nothing" option is used as a base case to which all other credible options will be compared, to identify the option that maximises the present value of net economic benefit. Furthermore, since no incremental expenditure is implemented under the "Do nothing" option, the "Do nothing" option is considered a zero-cost and zero-benefit option.

5.2. Option 2 – Non-network or SAPS solutions

Non-network or SAPS options contracted to provide network support services from within the distribution or sub-transmission networks serviced by CBTS, to reduce the net maximum demand on CBTS (i.e., reduce the EUE) thereby addressing the identified need (at least in part).

Network support services could include services such as voluntary load reduction (demand response), aggregated distributed energy resources (virtual power plants), or larger-scale dispatchable embedded storage and/or generation resources.

Chapter 4 details the required technical characteristics as well as the maximum fees available to a non-network or SAPS service provider, based on the current preferred *network* option. Network support may also be combined with suitable network augmentation options to defer or reduce the scope of a credible network option.

5.3. Option 3 - Install a 4th 220/66 kV transformer at CBTS

This option involves installing a fourth 150 MVA 220/66 kV transformer at CBTS to increase the thermal capacity ratings of the transmission connection assets at this terminal station. There is already provision in the original design of the terminal station to accommodate a fourth transformer. The scope of works would also involve installing a fourth 66 kV bus with a ring connection, and rearrangements of the existing 66 kV sub-transmission feeders within the terminal station to allow CBTS to operate with the 66 kV bus split into a B12 and a B34 group, so that maximum short circuit levels can be maintained within safe levels. A simplified single line diagram is shown in Figure 11.

Figure 11: CBTS proposed transmission connection assets single line diagram (Option 3)

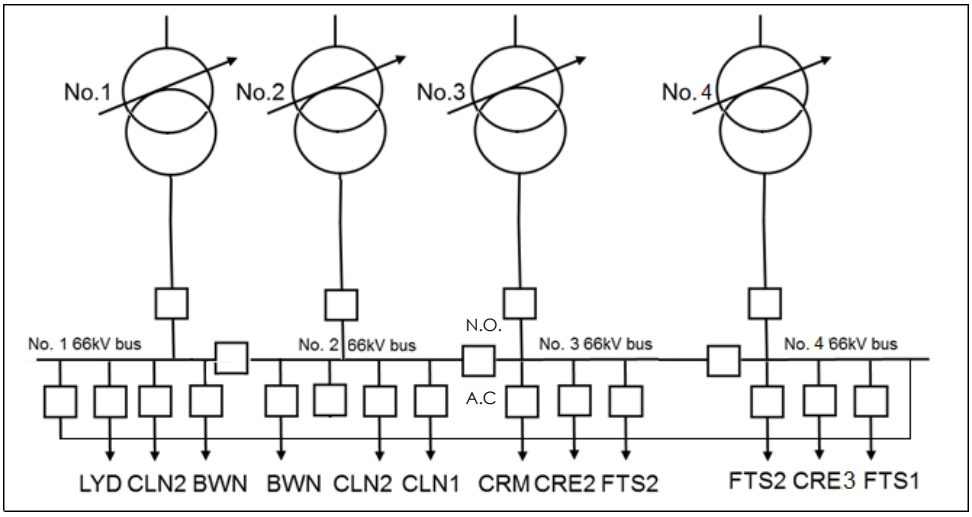

The scope of work required for this option includes:

- a new fourth 150 MVA 220/66 kV transformer to the west of the existing transformers, including firewalls;
- a new 220 kV circuit breaker, bay and rack;
- extending the No.1 66 kV bus with two new circuit breakers and establish a new No.4 66 kV bus with five new 66 kV circuit breakers;
- a neutral earth reactor at the new fourth transformer 66 kV neutral that matches the neutral earth reactors at all existing transformers;
- a new auto-reclose scheme, which will provide for parallel operation of three transformers in the event of a transformer or bus outage;
- a new 66 kV ring bus to link the No.1 and No.4 66kV buses;
- relocation of AusNet and United Energy 66 kV feeder exits as shown in Figure 11with BWN, LYD, CLN loops on 1-2 bus (B12) group and CRE, FTS, CRM on 3-4 bus (B34) group. Three feeders (BWN, CLN2 and FTS2) are to be double switched; and
- replacement of line protection at CRE and CLN to match new line double-switched protection at CBTS.

This option meets the identified need by alleviating the load at risk and removing nearly all the EUE at CBTS, after installation of the fourth transformer at CBTS, over the next ten years. Based on an initial assessment, this option maximises the net market benefits and is therefore likely to be the preferred *network* option. The estimated capital cost of this network option is $42.5 million (real $2024) which has present value of $44.4 million and an annualised cost of $2.3 million. Based on this annualised cost, the optimal timing for the fourth transformer is before summer 2027-28.

5.4. Option 4 - Install two 50 MVAr 66 kV capacitor banks

This option involves installing two 50 MVAr 66 kV capacitor banks to reduce the net maximum demand on CBTS and delay the identified need. There is provision to accommodate capacitor banks at CBTS and this would involve extension of the existing 66 kV buses within the terminal station as shown in Figure 12.

Currently, CBTS operates at a power factor of approximately 0.97 lagging in summer and does not have any 66 kV capacitor banks. Two 50 MVAr 66 kV capacitor banks installed will reduce POE10 maximum demand by approximately 16 MVA and could defer the preferred network option (Option 3) by one year given the average growth rate is around this level.

Figure 12: CBTS proposed transmission connection assets single line diagram (Option 4)

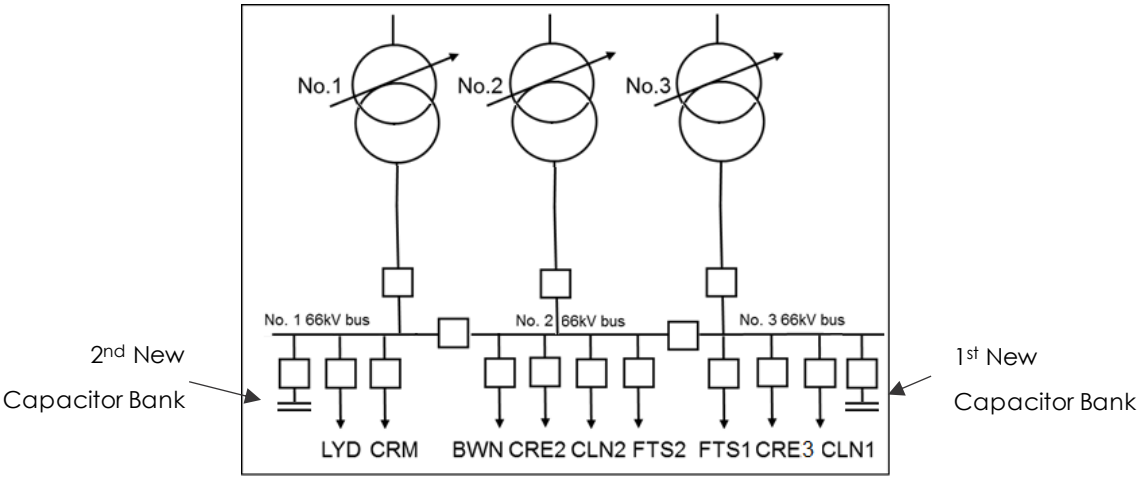

The estimated capital cost of the capacitor banks is $4.8 million (real $2024). This option meets the identified need by alleviating the supply capacity risk and removing nearly all the expected unserved energy, after installation of the fourth transformer at CBTS, over the next 10 years. The total present value capital cost of this network option, including the deferred installation of the fourth transformer, is $49.7 million, and has an annualised cost of $2.6 million.

5.5. Option 5 - Establish new feeders to offload CBTS

This option involves establishing new 22 kV distribution feeders to offload CBTS to maintain the maximum demand on CBTS within its "N" rating and to maintain its present load transfer capability to address the identified need. There is opportunity to establish two new 22 kV distribution feeders from United Energy's Mordialloc (MC) and Frankston South (FSH) zone substations, located adjacent to the Cranbourne supply area. These zone substations, supplied by Heatherton Terminal Station (HTS) and Tyabb Terminal Station (TBTS) respectively, have spare capacity to offload parts of zone-substations CRM and LWN, which are both currently supplied from CBTS.

In total this option requires the establishment of 2.7 km of 22 kV underground cable for the new MC distribution feeder and 2.1 km of 22 kV underground cable for the new FSH feeder, as well as the zone substation works including new circuit breakers as shown in Figure 13. Establishing these two feeders will allow up to 26 MVA of load to be offloaded from CBTS and could defer the preferred network option (Option 3) by two years.

Figure 13: Proposed new distribution feeders to offload CBTS (Option 5)

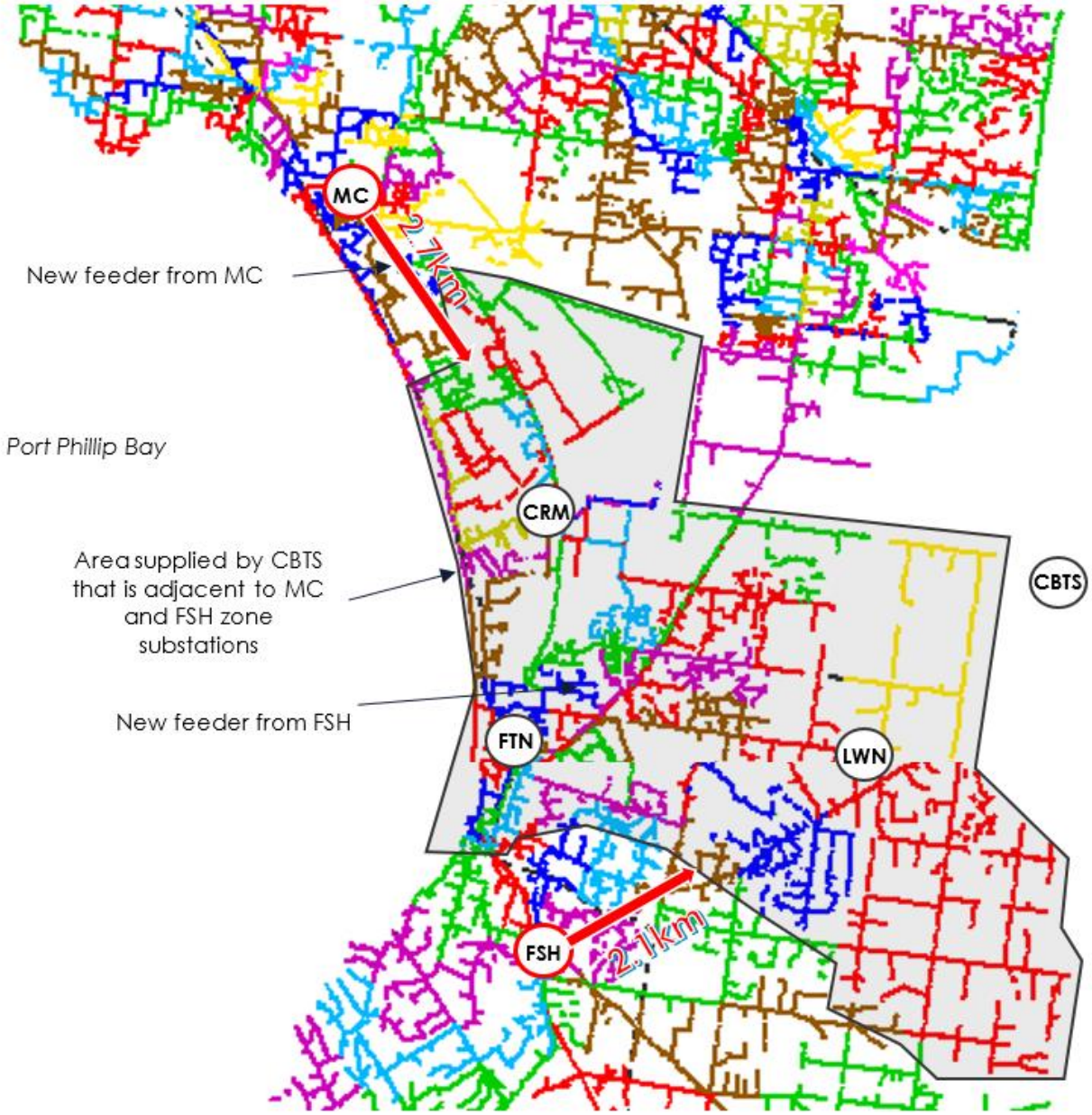

The estimated capital cost of the 22 kV feeders is $6.42 million (real $2024). This option meets the identified need by alleviating the supply capacity risk and removing nearly all the expected unserved energy, after installation of the fourth transformer at CBTS, over the next 10 years. The total present value capital cost of this network option, including the deferred installation of the fourth transformer, is $51.7 million, and has an annualised cost of $2.7 million.

5.6. Option 6 - Establish a new 220/66 kV terminal station

This option involves establishing a new two transformer 220/66 kV terminal station in the Pakenham area (site yet to be identified) to reduce the maximum demand on CBTS, transferring load to the new terminal station by re-arranging the existing sub-transmission network, thereby addressing the identified need. A possible solution would be to transfer zone substations PHM, CLN and LLG to the new terminal station, equating to around 170 MVA of load transferred as shown in Figure 14.

Figure 14: Possible sub-transmission network schematic diagram (Option 6)

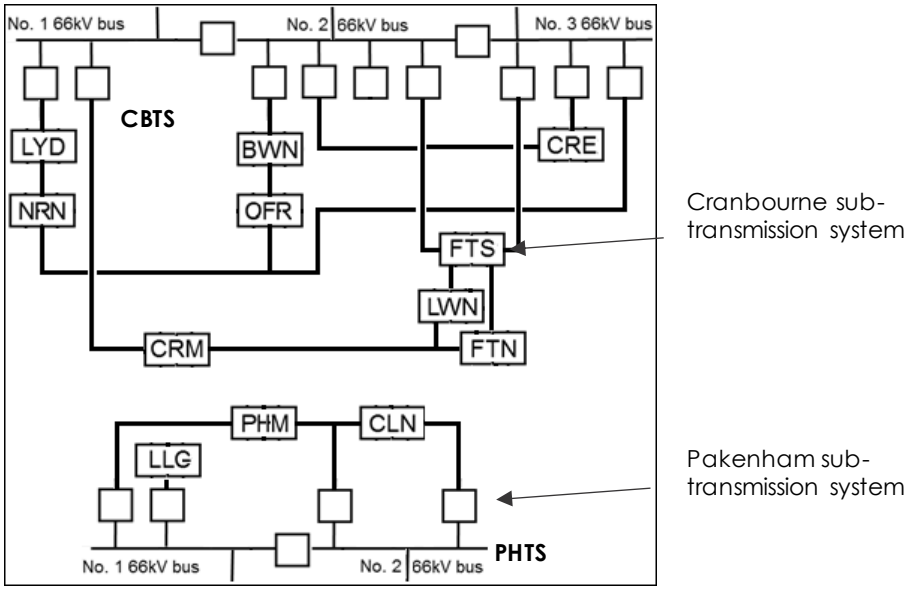

This option meets the identified need by alleviating the supply capacity risk and removing nearly all the expected unserved energy over the next 10 years.

However, this option is the most expensive option with a total estimated capital cost of $240 million (real $2024) which, has a present value capital cost of $260.1 million, and has an annualised cost of $13.3 million.

6. Submissions and next steps

6.1. Request for submissions

AusNet and United Energy invites written submissions and enquires on the matters set out in this PSCR from Registered Participants, AEMO, interested parties, non-network and SAPS providers, and those registered on our demand side engagement registers.

All submissions and enquiries should be titled "*Cranbourne Supply Area RIT-T*" and directed to both:

Dasun De Silva (AusNet)

Manager Transmission and Sub-transmission Planning

Email: dasun.desilva@ausnetservices.com.au

Richard Robson (United Energy)

Manager Sub-transmission Planning and Major Connections

Email: ricrobson@powercor.com.au

The consultation on this PSCR is open for 12 weeks. Submissions are due on or before 10th January 2025.

Submissions will be published on the Australian Energy Market Operator (AEMO), AusNet and United Energy websites. If you do not wish for your submission to be published, please clearly stipulate this at the time of lodging your submission.

6.2. Next steps

Following conclusion of the PCSR consultation period, AusNet and United Energy will, having regard to any submissions received on the PSCR, prepare and publish a project assessment draft report (PADR) including:

- A summary of, and commentary on, the submissions on the PSCR;
- A detailed market benefit assessment of the proposed credible options to address the identified need; and
- Identification of the proposed preferred option to meet the identified need.

Publication of that report will trigger the second stage of consultation. AusNet and United Energy intend on publishing the PADR in early 2025.

A. RIT-T assessment and consultation process

Figure 15: RIT-T Process

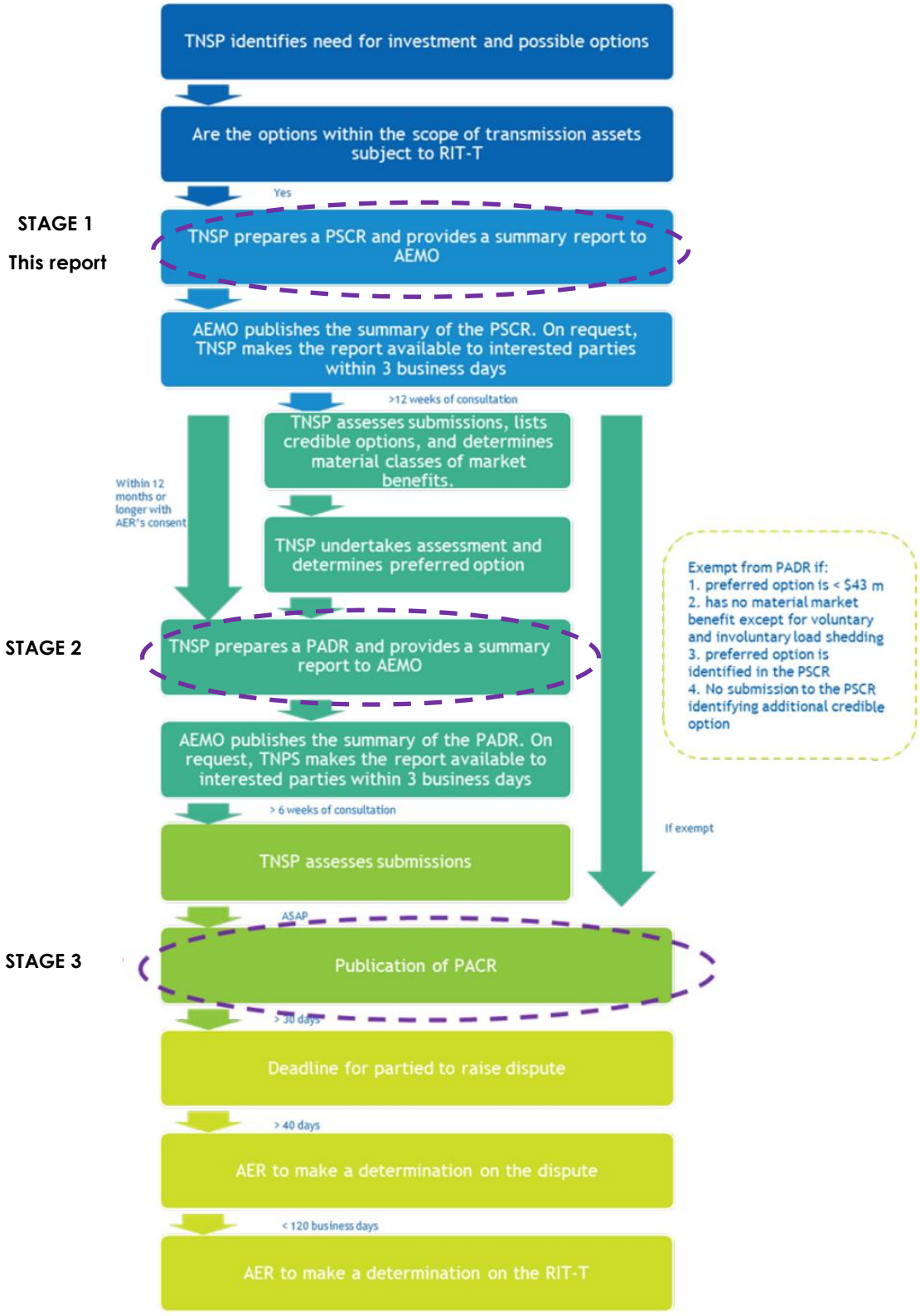

B. RIT-T compliance checklist

This appendix sets out a checklist in Table 9 which demonstrates the compliance of this PSCR with the requirements of clause 5.16.4(b) of the NER version 214.

Table 9: PSCR RIT-T compliance checklist

A RIT-T PROPONENT MUST PREPARE A REPORT WHICH MUST INCLUDE:	CHAPTER
(1) a description of the identified need;	Chapter 2
(2) the assumptions used in identifying the identified need (including, in the case of proposed reliability corrective action, why the RIT-T proponent considers reliability corrective action is necessary);	Chapter 3
(3) the technical characteristics of the identified need that a non-network option would be required to deliver, such as: (i) the size of load reduction or additional supply; (ii) location; and (iii) operating profile;	Chapter 4
(4) if applicable, reference to any discussion on the description of the identified need or the credible options in respect of that identified need in the most recent Integrated System Plan;	Not applicable
(5) a description of all credible options of which the RIT-T proponent is aware that address the identified need, which may include, without limitation, alternative transmission options, interconnectors, generation, system strength services, demand side management, market network services or other network options;	Chapter 5
(6) for each credible option identified in accordance with subparagraph (5), information about: (i) the technical characteristics of the credible option; (ii) whether the credible option is reasonably likely to have a material inter-network impact; (iii) the classes of market benefits that the RIT-T proponent considers are likely not to be material in accordance with clause 5.15A.2(b)(6), together with reasons of why the RIT-T proponent considers that these classes of market benefits are not likely to be material; (iv) the estimated construction timetable and commissioning date; and (v) to the extent practicable, the total indicative capital and operating and maintenance costs.	

AusNet Services

Level 31
2 Southbank Boulevard
Southbank VIC 3006
T +613 9695 6000
F +613 9695 6666
Locked Bag 14051 Melbourne City Mail Centre Melbourne VIC 8001
www.AusNetservices.com.au

Follow us on

@AusNetServices
@AusNetServices
@AusNet.Services.Energy



AusNet