Final Project Assessment Report (Dandenong Valley Zone Substation Secondary Assets Condition)

Project No. UE-RCA-S-24-001

united energy

Disclaimer
The master document is controlled electronically.
Ensure latest version prior to use.

Based on document template: UE-TP-2202.5 Final Project Assessment Report Template Revision 221216
Document controlled in accordance with ST-1750 INMS Document Management Standard

Document Control

Version	Amendment Overview
1	Initial Version

Table of Contents

1. Executive Summary 1

1.1 Purpose 1
1.2 Notice of Determination Report 1
1.3 Final Project Assessment Report 1
1.4 The Identified Need 2
1.5 Credible Options for Addressing the Identified Need 3
1.6 Scenarios and Sensitivities Considered 4
1.7 NPV Results 5
1.8 Preferred Option 6
1.9 Next Steps 6

2. Introduction 7

3. Referenced Documents 7

4. Definitions 8

5. Identified Need 10

5.1 Network Overview 10
5.2 Description of the Identified Need 11
5.2.1 RTU Condition 12
5.2.2 Protection and Control Equipment Condition 13
5.3 Quantification of the Identified Need 14

6. Key Assumptions on the Identified Need 15

6.1 Method for Quantifying the Identified Need 15
6.1.1 Safety 15
6.1.2 Reliability 15
6.2 Forecast Maximum Demand 16
6.3 Characteristic of Load Profile 16
6.4 Load Transfer Capacity and Supply Restoration Times 18
6.5 Asset Ratings 18
6.6 Value of Customer Reliability 18
6.7 Asset Failure Rates 18
6.8 Value of Safety Consequence 19
6.9 Discount Rates 19

7. Credible Options 20

8. Market Modelling Methodology 21

8.1 Classes of Market Benefits Considered Material 21
8.1.1 Changes in Safety Risk Cost 21
8.1.2 Changes in Involuntary Load Shedding 21
8.2 Classes of Market Benefits Not Expected to be Material 21
8.2.1 Changes in Load Transfer Capacity and the Capacity of Embedded Generating Units 22
8.2.2 Changes in Electrical Energy Losses 22
8.2.3 Changes in Voluntary Load Curtailment 22
8.2.4 Changes in Costs to Other Parties 22

8.2.5 Difference in Timing of Expenditure 22
8.2.6 Additional Option Value 22
8.3 Costs of Credible Options 23
8.4 Scenarios 23
8.5 Sensitivities 23
9. Results of Analysis 24
9.1 Gross Market Benefits 24
9.2 Net Market Benefits 25
9.3 Sensitivity Assessment 26
9.4 Economic Timing 27
10. Preferred Option 27
11. Next Steps 27
12. Checklist of Compliance with NER Clauses 28
Appendix A: Secondary Assets Photos 29

List of Figures

Figure 1: DVY Electrical Single Line Diagram 10
Figure 2: DVY Supply Area 11
Figure 3: Annual Load Profile at DVY 16
Figure 4: Load Profile on Day of Annual Maximum Demand at DVY 17
Figure 5: Annual Load-Duration Curve at DVY 17
Figure 6: Gross Market Benefits: Central Scenario ($'000, Real 2024) 25
Figure 7: In-Service Protection, Control & Communications Equipment at DVY 29

List of Tables

Table 1: Forecast Impact of the Identified Need – Safety and Reliability ($'000, Real 2024) 2
Table 2: Base Case 3
Table 3: Credible Options Assessed in this RIT-D 3
Table 4: Sensitivity Analysis Variables 4
Table 5: Scenario Variables and Weightings 4
Table 6: Present Value of Net Market Benefits of Credible Options - Scenarios ($'000, Real 2024) 5
Table 7: Present Net Market Benefits of Credible Options - Sensitivities ($'000, Real 2024) 5
Table 8: Expected Timing of the Preferred Option 6
Table 9: Referenced Documents 7
Table 10: Terms and Definitions 8
Table 11: DVY RTU Condition and Failure History 12
Table 12: DVY Protection & Control Relay Failure History 13
Table 13: Base Case DVY Reliability and Safety Risk Quantification ($'000, Real 2024) 14
Table 14: Base Case 15
Table 15: DVY Maximum Demand Forecast (MVA) 16
Table 16: Summary of DVY Ratings (MVA) 18
Table 17: Summary of Location Specific VCR 18
Table 18: Summary of Asset Failure Rates and Hazard Function (Weibull Distribution Parameters) 18
Table 19: Summary of Asset Reliability Consequence Probability 19
Table 20: Summary of Asset Safety Consequence Probability 19
Table 21: Summary of Safety Consequence Values 19
Table 22: Credible Options Assessed in this RIT-D 20
Table 23: Capital and Operating Costs of Credible Options ($'000, Real 2024) 23
Table 24: Present Value of Costs of Credible Options ($'000, Real 2024) 23
Table 25: Scenario Variables and Weightings 23
Table 26: Sensitivity Analysis Variables 24
Table 27: Gross Market Benefits Option 1 - Replace the DVY secondary systems 24
Table 28: Gross Market Benefits Option 2 - Replace DVY RTU, then remaining secondary systems two-years later 24
Table 29: Net Market Benefits of Credible Options for the Weighted Scenario 25
Table 30: Present Net Market Benefits of Credible Options - Sensitivities ($'000, Real 2024) 26
Table 31: Present Value of Net Market Benefits of Credible Options - Scenarios ($'000, Real 2024) 26
Table 32: Expected Timing of the Preferred Option 27
Table 33: NER Requirements Checklist 28

1. Executive Summary

United Energy (UE) is a regulated Victorian electricity distribution business. UE distributes electricity to more than 727,000 customers across Melbourne's east and south-east metropolitan area, and the Mornington Peninsula. The UE network consists of more than 215,000 poles and over 13,590 kilometres of overhead lines and underground cables. Electricity is received via 92 sub-transmission lines at 47 zone substations, where it is transformed from sub-transmission voltages down to distribution voltages.

The area of the UE network that is the subject of this Regulatory Investment Test for Distribution (RIT-D) is the Dandenong Valley Zone Substation (DVY) supply area (i.e. DVY supply area) that includes parts of the suburbs of Dandenong South, Lyndhurst, Bangholme and Carrum Downs. DVY is owned and operated by UE, providing power to approximately 4,294 customers, with a significant portion of these being industrial and commercial.

1.1 Purpose

This Final Project Assessment Report (FPAR) has been prepared by UE in accordance with the requirements of clause 5.17.4, paragraph (r) of the National Electricity Rules (NER) version 209.

The purpose of this report is to identify the preferred option to address the identified need, associated with the network safety and reliability limitations within the DVY supply area. This report has been prepared following the publication of the Notice of Determination Report and represents the final stage of the RIT-D process.

The preferred option involves replacing the DVY secondary systems, built to UE's latest design standards. This option addresses both the safety need and reliability need. The cost of the preferred option is $7.60 million (Real, 2024) and is required to be commissioned by November 2025.

1.2 Notice of Determination Report

On 16th May 2024, UE published a Notice of Determination Report in accordance with clause 5.17.4, paragraphs (c) and (d) of the NER. The purpose of that report was to present the potential credible options considered, and to explain the reasons for concluding that there would unlikely be any potential credible non-network or Standalone Power System (SAPS) options (or any combination of those options, or with a network option) that could adequately and economically address the identified need within the DVY supply area.

1.3 Final Project Assessment Report

Following publication of the Notice of Determination report, UE is required to prepare and publish a Final Project Assessment Report (FPAR), as required under NER clause 5.17.4, paragraph (p), as the total cost of the most expensive credible network option to address the identified need, is less than the trigger threshold of $12 million[1] for the publication of, and consultation on, a Draft Project Assessment Report (DPAR).

The NER requires that the FPAR includes matters detailed in NER clause 5.17.4, paragraph (j) as follows:

- Provide background information on the network servicing the DVY supply area and its limitations.
- Describe the need which UE is seeking to address, together with the assumptions used in identifying that need.
- Describe the credible options that are considered in this RIT-D assessment.
- Explain the materiality of each class of market benefit.
- Describe the methods used in quantifying each material market benefit.
- Quantify costs, high-level cost breakdowns, and material market benefits for each of the credible options.
- Present the results of an NPV analysis, with explanatory statements regarding the results.
- Identify the preferred option, its costs, optimum timing and its technical characteristics.

[1] https://www.aer.gov.au/networks-pipelines/guidelines-schemes-models-reviews/cost-thresholds-review-for-the-regulatory-investment-tests-2021

1.4 The Identified Need

The identified need at DVY is to protect power sector workers and members of the public from harm caused by asset failure (Safety), and to continue to maintain a reliable power supply to the residences and businesses that are dependent on the supply from this distribution network (Reliability).

The condition of the secondary assets at DVY is deteriorating. In particular, the condition of the remote terminal unit (RTU) for provision of supervisory control and data acquisition (SCADA) telemetry services at DVY is poor, being at risk of failure and is technically obsolete. The communication protocol it uses for communication with protection and control relays within the zone substation is legacy and reliant upon proprietary protocol conversion hardware. The RTU equipment is no longer supported by the vendor and has had a history of failures and operational issues.

Furthermore, most of the protection and control relays at DVY are now technically obsolete, being no longer supported by vendors, with no spare parts.

UE has assessed there is now an unacceptable risk of asset failure, with significant consequences for safety, and for the reliability of electricity supply to UE's customers within the DVY supply area.

For the purposes of referencing this RIT-D, this RIT-D is referred to as the "Dandenong Valley Zone Substation Secondary Assets Condition" identified need.

Table 1 summarises the forecast financial impact of the identified need on reliability and safety for customers within the DVY supply area, expressed as the Expected Unserved Energy (EUE) cost and the safety risk cost respectively.

Table 1: Forecast Impact of the Identified Need – Safety and Reliability ($'000, Real 2024)

Financial Year	EUE Cost	Safety Risk Cost[2]	Total Risk Cost
2024	324	238	563
2025	477	255	732
2026	627	276	902
2027	761	290	1051
2028	898	312	1210
2029	1023	327	1350
2030	1141	351	1492
2031	1255	373	1629
2032	1385	413	1798
2033	1554	457	2012
2034	1612	467	2079
2035	1633	454	2087
2036	1712	468	2180
2037	1788	488	2276
2038	1859	509	2367

For the purposes of this RIT-D, which involves secondary systems assets, economic evaluations are undertaken over a 15-year analysis period.

[2] For simplicity, no AFAP disproportionate factors have been applied to the Safety Risk Cost.

Table 2 provides a summary of the base case option, using the risk costs presented in Table 1.

Table 2: Base Case

Option	Description
Do Nothing (status quo)	This base case option involves running the DVY secondary systems to failure. That is, continue with existing maintenance of the secondary systems, coupled with replacement upon failure. Given this option does not address the identified need at all, the cost of unplanned asset failures is represented by the full value of both the EUE and the safety risk costs. The present value of all costs (EUE and safety risk) is $15.47 million (Real, 2024).

1.5 Credible Options for Addressing the Identified Need

The following options in Table 3 have been included as credible options in the RIT-D assessment.

Table 3: Credible Options Assessed in this RIT-D

Option	Description
Option 1 - Replace the DVY secondary systems (by November 2025)	This option involves a replacement of all the secondary systems at DVY, built to UE's latest design standards. This option addresses both the safety need and reliability need. The total capital cost of this option is $7.60 million (Real, 2024), including labour (45%), contracts (51%) and materials (4%). The present value of all costs (capital, O&M, EUE and safety risk) is $9.01 million (Real, 2024).
Option 2 - Replace the DVY RTU, then the remaining secondary systems two-years later (by November 2027)	This option involves a replacement of the RTU first followed by the remaining secondary systems at DVY two years later, built to UE's latest design standards. This option addresses the majority of the safety need and reliability need. The total capital cost of this option is $9.16 million (Real, 2024), including labour (44%), contracts (53%) and materials (3%). The present value of all costs (capital, O&M, EUE and safety risk) is $10.03 million (Real, 2024).

The purpose of the RIT-D is to identify the preferred option, being the credible option that maximises the present value of net market benefit to all those who produce, consume and transport electricity in the National Electricity Market (NEM). In order to quantify the net market benefits of each credible option, the value of EUE and safety risk cost under the base case (where no action is taken by UE) is compared against the value of EUE and safety risk cost with each of the credible options in place.

1.6 Scenarios and Sensitivities Considered

In order to test the robustness of the RIT-D preferred option to changes in assumptions, a set of sensitivities to key input variables of the analysis has been applied. Table 4 lists the variables and respective ranges adopted for the purpose of defining sensitivities.

Table 4: Sensitivity Analysis Variables

Sensitivity Testing	Lower Bound	Base Value	Upper Bound
Maximum demand	90%	100%	105%
Capital and operational costs	80%	100%	120%
Value of customer reliability	80%	100%	120%
Discount rate[3]	3.0%	7.0%	10.5%
Asset failure rates	85%	100%	115%

The NER stipulates that the RIT-D must be based on a cost-benefit analysis that considers a number of reasonable scenarios of future supply and demand[4]. For the identified need in this RIT-D assessment, the major input variables that impact future reliability and safety outcomes within the DVY supply area, are changes in the demand for electricity and changes in the asset failure rates. The scenarios and their weightings that are used in the economic evaluation to identify the preferred option, are summarised in Table 5.

Table 5: Scenario Variables and Weightings

Scenario Definition	Low Scenario	Central Scenario	High Scenario
Weighting	25%	50%	25%
Maximum demand	90%	100%	105%
Asset failure rate	85%	100%	115%

Four scenarios are considered:

- Central scenario (Maximum demand and Asset failure rate set to the base values in Table 4)
- Low scenario (Maximum demand and Asset failure rate set to the lower bound values in Table 4)
- High scenario (Maximum demand and Asset failure rate set to the upper bound values in Table 4)
- Weighted scenario (Comprising 25% worth of low scenario; 50% worth of central scenario; and 25% of high scenario).

[3] Based on AEMO's 2023 IASR, Table 31.
[4] NER: clause 5.17.1(c) paragraph 1

1.7 NPV Results

Table 6 sets out a comparison of the present value of net market benefits of each option under all reasonable scenarios, over a 15-year period.

Table 6: Present Value of Net Market Benefits of Credible Options - Scenarios ($'000, Real 2024)

Scenario	Do Nothing		Option 1		Option 2	
	Net Market Benefit	Ranking	Net Market Benefit	Ranking	Net Market Benefit	Ranking
Weighted	0	3	6,389	1	5,362	2
Central	0	3	6,462	1	5,433	2
Low	0	3	3,522	1	2,583	2
High	0	3	9,110	1	7,998	2

The RIT-D assessment summarised in Table 6, demonstrates that Option 1 maximises the present value of net market benefits under the Weighted Scenario (i.e. a weighting of the Central, Low and High Scenarios).

For all reasonable scenarios considered, Option 1 maximises the present value of net market benefits for all scenarios.

Based on the Weighted Scenario, the preferred option for investment in the DVY supply area is therefore Option 1 (i.e. Replace the DVY secondary systems (by November 2025)). Option 1 satisfies the requirements of the RIT-D.

The robustness of the preferred option to credible changes in input variables is summarised in the sensitivity analysis results of Table 7.

Table 7: Present Net Market Benefits of Credible Options - Sensitivities ($'000, Real 2024)

Sensitivity for Central Scenario	Option 1	Option 2
All Variables: Base values	6,462	5,433
Maximum demand: Lower bound	5,401	4,398
Maximum demand: Upper bound	6,992	5,950
Capital and operational costs: Lower bound	7,927	7,006
Capital and operational costs: Upper bound	4,996	3,860
Value of customer reliability: Lower bound	4,340	3,363
Value of customer reliability: Upper bound	8,583	7,503
Discount rate: Lower bound	12,106	10,589
Discount rate: Upper bound	3,247	2,616
Asset failure rates: Lower bound	4,423	3,463
Asset failure rates: Upper bound	8,500	7,403

Option 1 has a present value of net market benefit that remains positive under all credible sensitivities, and when compared with Option 2, clearly maintains its status as the preferred option.

Although the choice of the preferred option is clear, the timing of this investment is not, given a number of reasonable scenarios are investigated. The economic timing of the preferred option is when the annualised value of EUE and safety risk cost (i.e. the annualised cost of the total risk) exceeds the annualised cost of the preferred option (i.e. the annualised investment cost). Table 8 shows the expected timing of the preferred option under each reasonable scenario.

Table 8: Expected Timing of the Preferred Option

Scenario	Annualised cost of total risk minus investment costs ('000, Real 2024)				Optimum Timing Before Summer[5]
	2025	2026	2027	2028	
Weighted	199	368	516	674	2025/26
Central	201	371	520	679	2025/26
Low	16	140	249	365	2025/26
High	376	589	776	974	2025/26

Under the Weighted Scenario, the optimum timing of Option 1 is prior to summer 2025/26 (i.e. November 2025).

1.8 Preferred Option

The preferred option (Option 1) maximises the present value of the net economic benefit to all those who produce, consume and transport electricity in the NEM, considering a set of reasonable state-of-the-world scenarios and their weightings.

The preferred option was tested under a range of sensitivities. In each case, Option 1 was confirmed to provide positive economic benefits and is the highest-ranked option in all sensitivities.

The optimum timing for commissioning of the preferred option is no later than November 2025.

The preferred option has a capital cost of $7.6 million (Real, 2024).

The 15-year present value of net market benefits associated with the preferred option is $6.46 million (Real, 2024).

1.9 Next Steps

This FPAR represents the final stage of the RIT-D process.

In accordance with the provisions set out in clause 5.17.5, paragraph (c) of the NER, Registered Participants or interested parties may, within 30 days after the publication of this report, dispute the conclusions made by UE in this report with the Australian Energy Regulator (AER).

Accordingly, Registered Participants and interested parties who wish to dispute the recommendation outlined in this report must do so by 5th July 2024. Any parties raising such a dispute are also required to notify United Energy at planning@ue.com.au. If no formal dispute is raised, UE will commence with the investment activities necessary to proceed with the implementation of the preferred option.

[5]The economic analysis concludes the optimum timing is 2024/25 however the preferred option cannot be constructed within this timeframe. Instead it can be constructed before the 2025/26 summer.

2. Introduction

United Energy (UE) is a regulated Victorian electricity distribution business. UE distributes electricity to more than 727,000 customers across Melbourne's east and south-east metropolitan area, and the Mornington Peninsula. The UE network consists of more than 215,000 poles and over 13,590 kilometres of overhead lines and underground cables. Electricity is received via 92 sub-transmission lines at 47 zone substations, where it is transformed from sub-transmission voltages down to distribution voltages.

The area of the UE network that is the subject of this Regulatory Investment Test for Distribution (RIT-D) is the Dandenong Valley Zone Substation (DVY) supply area (i.e. DVY supply area) that includes parts of the suburbs of Dandenong South, Lyndhurst, Bangholme and Carrum Downs. DVY is owned and operated by UE, providing power to approximately 4,294 customers, with a significant portion of these being industrial and commercial.

This Final Project Assessment Report (FPAR) has been prepared by UE in accordance with the requirements of clause 5.17.4, paragraph (r) of the National Electricity Rules (NER) version 209, and is consistent with the Australian Energy Regulator's (AER) RIT-D Application Guidelines[6] and the Industry Practice Application Note for Asset Replacement Planning[7].

The publication of this FPAR represents the final stage of the consultation process in relation to the application of the RIT-D for addressing the identified need, associated with the network safety and reliability risks within the DVY supply area. The associated Notice of Determination report in relation to this RIT-D was published on 16th May 2024.

The NER requires that the FPAR includes matters detailed in NER clause 5.17.4, paragraph (j) as follows:

- Provide background information on the network servicing the DVY supply area and its limitations.
- Describe the need which UE is seeking to address, together with the assumptions used in identifying that need.
- Describe the credible options that are considered in this RIT-D assessment.
- Explain the materiality of each class of market benefit.
- Describe the methods used in quantifying each material market benefit.
- Quantify costs, high-level cost breakdowns, and material market benefits for each of the credible options.
- Present the results of an NPV analysis, with explanatory statements regarding the results.
- Identify the preferred option, its costs, optimum timing and its technical characteristics.

3. Referenced Documents

Table 9: Referenced Documents

Title	Document No.
UE Asset Risk Quantification Guide	UE-GU-2011

[6] AER: "AER – RIT-D Application Guidelines – October 2023". Available at: https://www.aer.gov.au/system/files/2023-10/AER%20-%20RIT-D%20guidelines%20-%20final%20amendments%20%28marked%20up%29%20-%206%20October%202023_0.pdf

[7] AER: "AER – Industry Practice Application Note – Asset Replacement Planning – January 2019". Available at: https://www.aer.gov.au/system/files/D19-2978%20-%20AER%20-Industry%20practice%20application%20note%20Asset%20replacement%20planning%20-%2025%20January%202019.pdf

4. Definitions

Table 10: Terms and Definitions

Term	Definition
A.C.	Alternating Current
AER	Australian Energy Regulator
AEMO	Australian Energy Market Operator
AFAP	As Far As Practicable
CPI	Consumer Price Index
DAPR	Distribution Annual Planning Report
D.C.	Direct Current
DN	Dandenong Zone Substation
DPAR	Draft Project Assessment Report
DSH	Dandenong South Zone Substation
DVY	Dandenong Valley Zone Substation
EUE	Expected Unserved Energy (MWh pa)
FPAR	Final Project Assessment Report
IASR	Inputs, Assumptions and Scenarios Report
ISP	Integrated System Plan
LTI	Lost Time Injury
NCC	Network Control Centre
NEM	National Electricity Market
NER	National Electricity Rules
NPV	Net Present Value
O&M	Operating and Maintenance
PoE	Probability of Exceedance
RIT-D	Regulatory Investment Test for Distribution
RTU	Remote Terminal Unit
SAPS	Standalone Power System
SCADA	Supervisory Control and Data Acquisition
UE	United Energy
VCR	Value of Customer Reliability ($/MWh)
VSL	Value of Statistical Life
50% PoE	The forecast maximum demand has a 50% probability of exceedance (PoE). That is, the forecast maximum demand is expected, on average, to be exceeded once in two years.
10% PoE	The forecast maximum demand has a 10% probability of exceedance (PoE). That is, the forecast maximum demand is expected, on average, to be exceeded once in ten years.
Credible option	An option that addresses the 'identified need', is commercially and technically feasible, and can be implemented in sufficient time to meet the 'identified need'.
Expected Unserved Energy (EUE)	The expected amount of energy that is not supplied each year expressed in MWh pa, because there are network limitations in meeting the demand, taking into account asset failures and malfunctions.

Term	Definition
Identified need	Any capacity, voltage, or safety limitation on the distribution system.
Limitation	Any limitations on the operation of the distribution system that will give rise to Expected Unserved Energy or safety risk consequences.
Network option	A means by which an 'identified need' can be fully or partly addressed by expenditure on distribution network assets.
Non-network or SAPS option	A means by which an 'identified need' can be fully or partially addressed other than by a network option.
Non-network service provider	A party who provides a non-network or SAPS option.
Potential credible option	An option has the potential to be a credible option based on an initial assessment of its ability to address the 'identified need'.
Preferred network option	A credible network option that maximises the present value of net economic benefit to all those who produce, consume and transport electricity in the NEM. The preferred network option can be a network option, or do nothing (i.e. status quo).
Preferred option	A credible option that maximises the present value of net economic benefit to all those who produce, consume and transport electricity in the NEM. The preferred option can be a network option, non-network or SAPS option, combination of both, or do nothing (status quo).
Value of Customer Reliability (VCR)	The value customers place on having a reliable supply of energy, expressed in $/MWh.

5. Identified Need

5.1 Network Overview

DVY is a 66/22 kV zone substation, with three 20/33 MVA transformers, servicing its supply area with 12 x 22 kV distribution feeders.

DVY is bounded mainly in the north by adjacent 22 kV zone substations DN (Dandenong) and DSH (Dandenong South) providing transfer capacity to be able to reduce load on the zone substation in the event of an emergency (such as a major asset failure, for example). The load transfer capability away from DVY is 15.4 MVA.

The rating of DVY with all transformers in service is 131.1 MVA, and with one transformer out of service the rating reduces to 87.4 MVA. This compares to a forecast 10% PoE maximum demand of 91.7 MVA for 2024/25, rising to 98.3 MVA by 2027/28.

The electrical single line diagram for DVY, showing the 66 kV assets, 66/22 kV transformers, and 22 kV assets (including distribution feeder exits) is illustrated in Figure 1.

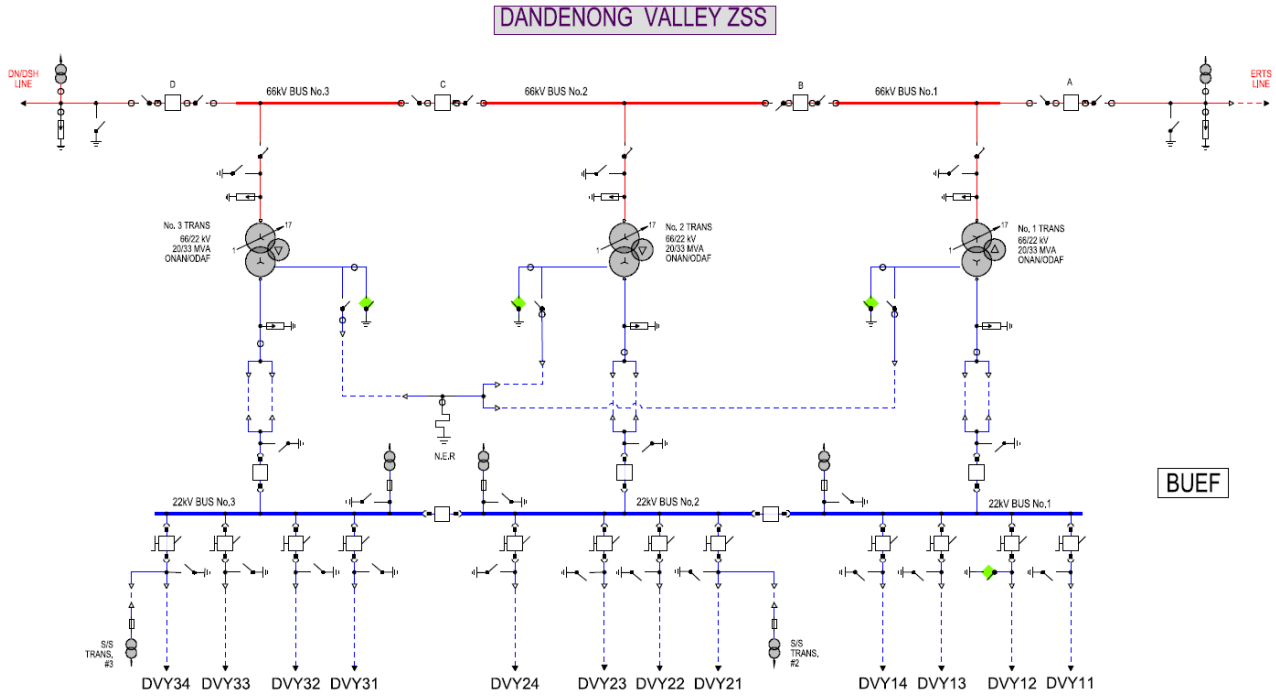

Figure 1: DVY Electrical Single Line Diagram

The DVY supply area includes parts of the suburbs of Dandenong South, Lyndhurst, Bangholme and Carrum Downs in Melbourne's outer south-eastern suburbs. DVY is owned and operated by UE, providing power to approximately 4,294 customers, with the majority of the load at DVY comprising of industrial and commercial customers, predominantly located within the northern side of the DVY supply area, but also growing southward.

The power supply coverage of DVY is illustrated in Figure 2.

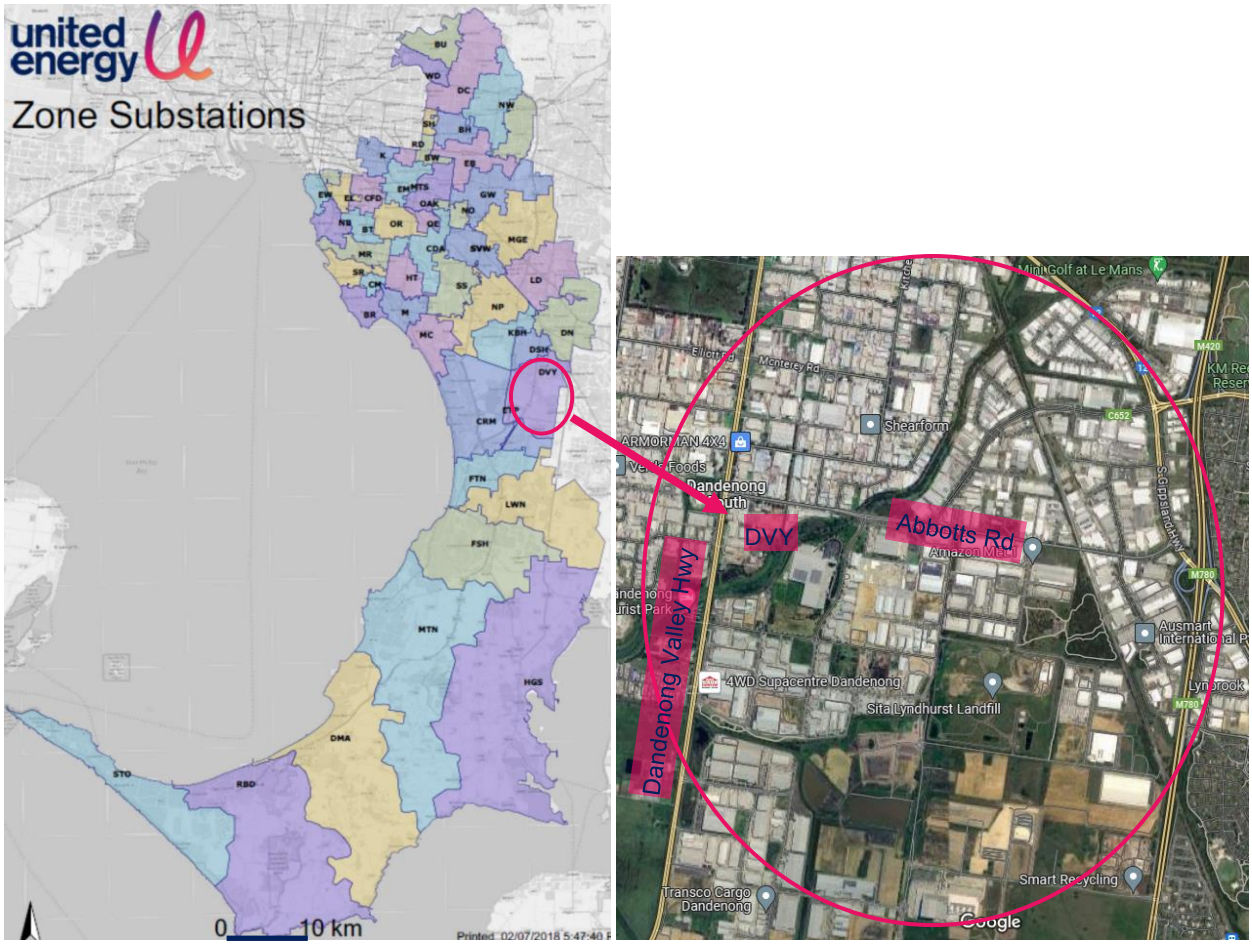

Figure 2: DVY Supply Area

5.2 Description of the Identified Need

The identified need at DVY is to protect power sector workers and members of the public from harm caused by asset failure (Safety), and to continue to maintain a reliable power supply to the residences and businesses that are dependent on the supply from this distribution network (Reliability).

The condition of the protection and control relays, remote terminal unit, and other secondary assets at DVY is deteriorating, and many are now technically obsolete, being unsupported by equipment suppliers, with no spares.

UE has assessed there is now an unacceptable risk of asset failure, with significant consequences for safety, and for the reliability of electricity supply to UE's customers within the DVY supply area. The secondary assets are no longer considered fit for purpose and need to be safely removed from service. While there is a need to remove these assets from service, there also remains a need to continue to supply electricity to customers within the DVY supply area serviced by these assets.

The need for investment and the possible options for addressing the Dandenong Valley Zone Substation Secondary Assets Condition identified need, has been foreshadowed in UE's 2023 Distribution Annual Planning Report (DAPR) [8].

The assets whose condition is of key concern are identified below and in Appendix A:, including a description and photographic evidence of their condition, and historical performance.

[8] UE: Distribution Annual Planning Report. Available at: https://dapr.unitedenergy.com.au/ue_data/UE-PL-2209%20Distribution%20Annual%20Planning%20Report%20DAPR%20-%202023.pdf

5.2.1 RTU Condition

The Remote Terminal Unit (RTU) is the only communication interface between DVY's protection and control relays and UE's network control centre (NCC), providing remote control and monitoring capability of the zone substation via SCADA. The condition of the RTU for provision of supervisory control and data acquisition (SCADA) telemetry services is poor, being at risk of failure and is technically obsolete. The communication protocol it uses for communication with all other protection and control relays within the zone substation is legacy and special hardware is required for protocol conversion. The hardware is no longer supported by the vendor and UE has very limited spares.

The RTU condition and failure history at DVY is listed in Table 11. Photographs of the RTU are provided in Appendix A:.

Table 11: DVY RTU Condition and Failure History

Date	Identified Issue	Identified Cause and Rectification
2023	RTU Failure	DVY RTU configuration error. Replaced CPU module with pre-loaded spare processor module to restore service.
2023	RTU Comms Failure	DVY RTU not responding to polling from UE SCADA via DNP3. Found DNP result code/error code 8888 which is DNP licence key dongle failed, faulty or corrupted. Recovered using spare key dongle (no spares remaining).
2023	RTU Failure	Issue with DVY RTU resolved on site.
2023	RTU Comms Failure	Two issues identified in regression-test of DVY RTU for follow up with testers.
2023	RTU Battery Alarm Active	Replaced backup battery in DVY RTU.
2022	RTU Failure	DVY RTU CPU module had lost its configuration, not scanning other modules or communicating via DNP to UE SCADA host. Loaded site configuration to CPU module and re-started RTU.
2022	RTU Failure	DVY RTU CPU module had lost its configuration, not scanning other modules or communicating via DNP to UE SCADA host. Replaced CPU module with spare and re-started RTU.
2022	RTU Comms Failure	DVY RTU processor - reloaded, and regression test competed.
2021	RTU Comms Failure	DVY RTU processor module had loss its configuration and firmware, unable to communicate to it therefore removed and replaced with spare, tested operation and carried out regression test.
2021	RTU Comms Failure	DVY RTU processor module had loss its configuration, removed and replaced with spare, tested operation and carried out regression test.
2020	RTU Comms Failure	No conclusive cause could be found to explain Comms time outs. Maybe linked to the Modbus to DNP3 serial converter of which we do not have a spare and it is no longer manufactured.
2019	RTU Failure	DVY RTU has lost its configuration. Configuration loaded back to RTU.
2019	RTU Failure	DVY RTU CPU module unresponsive, run LED flashing, all other module off-line (Active LED not on) and not polling IEDs. Replaced CPU with spare and tested.
2018	RTU Comms Failure	Investigation required by other party.
2018	RTU Comms Failure	DVY RTU had lost its configuration and firmware, the CPU module was replaced with a spare and config reloaded.
2017	RTU Comms Failure	Intermittent issue. Monitoring required.

Note: UE has only a one spare RTU CPU module which is swapped out with the in-service RTU CPU module upon failure. The faulty RTU CPU module is reset/reprogrammed and becomes the spare.

5.2.2 Protection and Control Equipment Condition

Protection and control systems are critical to the safe and reliable operation of the network. These systems are designed to detect the presence of power system faults and/or other abnormal operating conditions, and to automatically isolate the faulted network by the opening of appropriate high-voltage circuit breakers.

Failure to isolate power system faults will invariably result in severe damage to network assets, presenting a serious health and safety hazard to the public, and greatly increases the risk of fire starts.

Most of the protection and control relays at DVY are now technically obsolete, being no longer supported by vendors, and no spare parts. All of these factors increase the likelihood of a power system fault not being detected and safely isolated, or a maloperation.

The relay failure history at DVY is listed in Table 12.

Table 12: DVY Protection & Control Relay Failure History

Date	Identified Issue	Identified Cause and Rectification
2024	DVY23 and 1-2 22kV BT CB relay spurious operated alarms	Both relays reported CB status change to open despite breakers remaining closed. Unknown cause.
2023	DVY24 relay spurious operated alarm	Relay reported overcurrent operated and successful auto reclose alarms. No network fault or feeder CB operation observed. Unknown cause.
2020	DVY 66 kV CB D 'Y' CBF relay failure	Relay hardware failure (CB failure initiate circuit).
2020	DVY 66 kV CB C 'Y' CBF relay failure	Relay hardware failure (blue phase element).
2020	DVY 66 kV CB D 'Y' CBF relay failure	Relay hardware failure (white and blue phase elements).
1999	DVY21 relay failure	Relay hardware failure
1999	DVY24 relay failure	Relay hardware failure

5.3 Quantification of the Identified Need

Table 13 quantifies the forecast impact of the identified network need on customers. The table shows over the forecasting period, the risk costs and hence the potential market benefits considered, including:

1. Expected unserved energy (EUE) cost, which is the value of the energy at risk after taking into account the probability of asset failures or malfunctions at DVY, representing the deterioration in supply reliability within the DVY supply area.
2. Safety risk cost, which is the cost of harm to UE's staff and the general public located within the DVY supply area, as a result of safety incidents caused by asset failures or malfunctions at DVY.
3. Total risk cost which is the sum of the EUE cost and the safety risk cost.

Table 13: Base Case DVY Reliability and Safety Risk Quantification ($'000, Real 2024)

Financial Year	EUE Cost	Safety Risk Cost[9]	Total Risk Cost
2024	324	238	563
2025	477	255	732
2026	627	276	902
2027	761	290	1051
2028	898	312	1210
2029	1023	327	1350
2030	1141	351	1492
2031	1255	373	1629
2032	1385	413	1798
2033	1554	457	2012
2034	1612	467	2079
2035	1633	454	2087
2036	1712	468	2180
2037	1788	488	2276
2038	1859	509	2367

For the purposes of this RIT-D, economic evaluations are undertaken over a 15-year period, commensurate with the asset life of secondary assets.

Table 14 provides a summary of the base case option, using the risk costs presented above.

[9] For simplicity, no AFAP disproportionate factors have been applied to the Safety Risk Cost.

Table 14: Base Case

Option	Description
Do Nothing (status quo)	This base case option involves running the DVY secondary systems to failure. That is, continue with existing maintenance of the secondary systems, coupled with replacement upon failure. Given this option does not address the identified need at all, the cost of unplanned asset failures is represented by the full value of both the EUE and the safety risk costs. The present value of all costs (EUE and safety risk) is $15.47 million (Real, 2024).

6. Key Assumptions on the Identified Need

6.1 Method for Quantifying the Identified Need

UE adopts its Asset Risk Quantification Guide (UE-GU-2011) in quantifying safety and reliability risks associated with asset condition failures and their consequences. This modelling is based on Weibull distribution parameters for each asset class.

UE calculates the impact of changes in safety and reliability (in the form of involuntary load shedding), by comparing the total value of the safety cost and value of EUE under the base case (where no action is undertaken by UE) with each of the credible options in place using the assumptions below.

6.1.1 Safety

The safety risk to UE employees and the general public, arising from potential failure or malfunction of network assets is quantified by UE using an annualised safety risk cost, based on the asset conditions. The safety risk cost provides a measure of the expected financial value of the safety risk event. The safety risk cost is defined as the probability weighted cost of consequences, with the likelihood of consequences being the moderating factor in quantifying the risk.

The Electricity Safety Act[10] requires UE to design, construct, operate, maintain, and decommission its network to minimise hazards and risks to the safety of any person as far as reasonably practicable, or until the costs become disproportionate to the benefits from managing those risks. As such, UE's approach to safety risk is based on the As Far As Practicable (AFAP) principle.

In implementing this principle for assessing safety risks from asset condition failures, UE uses a Value of Statistical Life (VSL) to estimate the benefits of reducing the risk of death, a value of Lost Time Injury (LTI) to estimate the benefits of reducing the risk of injury, and a disproportionality factor. UE notes that this approach, including the use of a disproportionality factor[11], is consistent with practice notes provided by the AER[12], and is the approach taken by other network service providers within the NEM.

The AFAP principle recommends safety risk reduction measures be implemented unless the cost, time or form of the risk reduction measure is grossly disproportionate to the benefit gained from the reduced risk. A "Do Nothing" (or run to failure) approach would result in the poor condition assets remaining in service, deteriorating further, and completely failing to address any safety concerns.

6.1.2 Reliability

UE's reliability planning standard for its zone substation assets is based on a probabilistic planning approach which quantifies annualised EUE (in MWh per annum) of energy not supplied, taking into account the network capacity, demand characteristics, probability of an asset failure (or malfunction), and the restoration time. The value of EUE is expressed financially by multiplying the EUE with a locational Value of Customer Reliability (VCR) ($/MWh).

[10] Victorian State Government, Victorian Legislation and Parliamentary Documents, Electricity Safety Act 1998. Available at: https://www.legislation.vic.gov.au/in-force/acts/electricity-safety-act-1998/081.
[11] For the purposes of this RIT-D, a disproportionality factor of 1 has been applied.
[12] AER: "AER – Industry Practice Application Note – Asset Replacement Planning – January 2019". Available at: https://www.aer.gov.au/system/files/D19-2978%20-%20AER%20-Industry%20practice%20application%20note%20Asset%20replacement%20planning%20-%2025%20January%202019.pdf

6.2 Forecast Maximum Demand

Forecasts of the 10% PoE and 50% PoE maximum demand and power factor at DVY are presented in Table 15 from UE's 2023 DAPR. These forecasts are based on an expected economic growth scenario.

Table 15: DVY Maximum Demand Forecast (MVA)

Time Period	Power Factor	10% PoE	50% PoE
2024-25	0.98	91.7	89.1
2025-26	0.98	94.8	92.1
2026-27	0.98	96.8	94.4
2027-28	0.98	98.3	96.1
2028-29	0.98	99.8	97.7

6.3 Characteristic of Load Profile

UE has prepared load profiles that are characterised by the use of profiles from the most recent 50% PoE year. Based on this approach, the 2022/23 historical demand profile has been prepared and presented herein.

The coincident maximum demand of the customers within the DVY supply area occurs during working weekday periods. The annual demand profile at DVY expressed as a percentage of the 50% PoE maximum demand listed in Table 15, is illustrated in Figure 3.

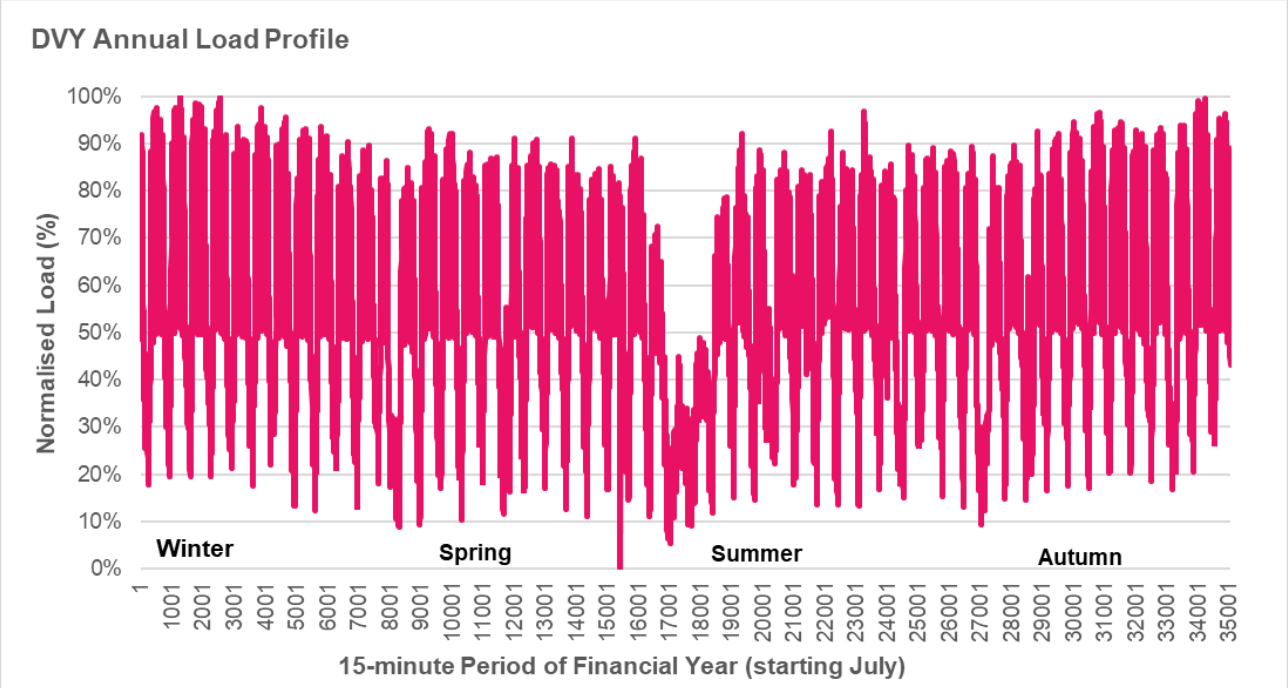

Figure 3: Annual Load Profile at DVY

The load profile on the day of a 50% PoE summer maximum demand is illustrated in Figure 4. The prominence of industrial and commercial load within the DVY supply area, results in a maximum demand occurring during the morning.

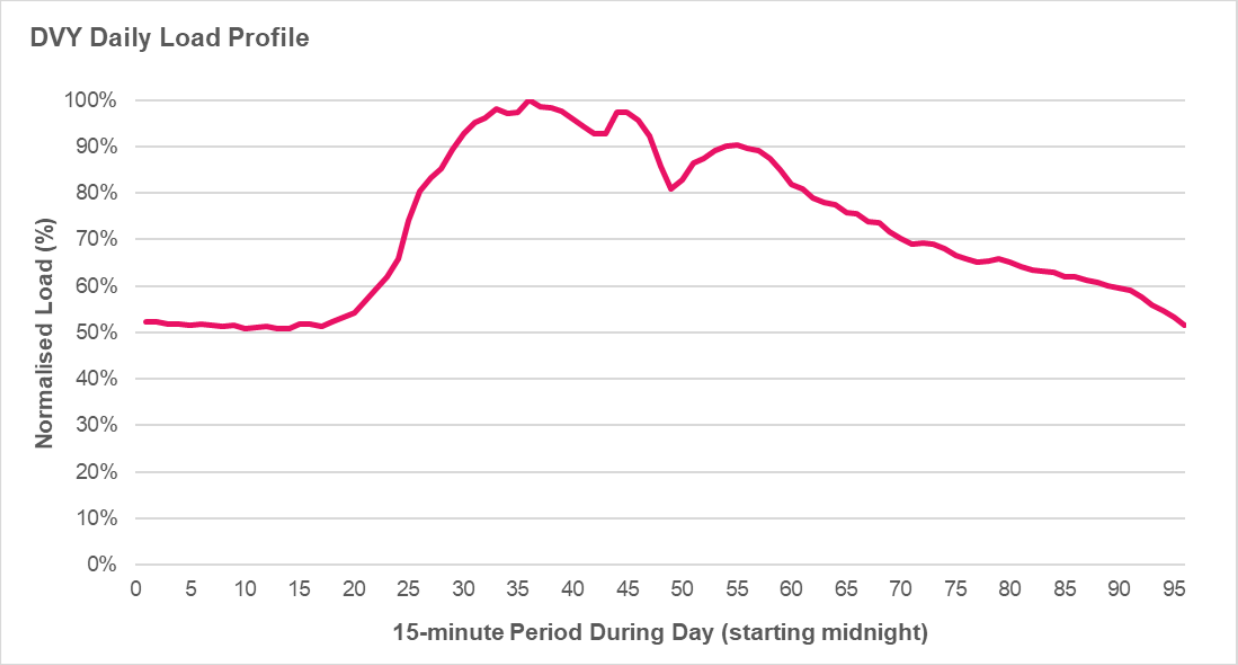

Figure 4: Load Profile on Day of Annual Maximum Demand at DVY

Figure 5 shows the normalised annual load-duration curve at DVY for a 50% PoE maximum demand year.

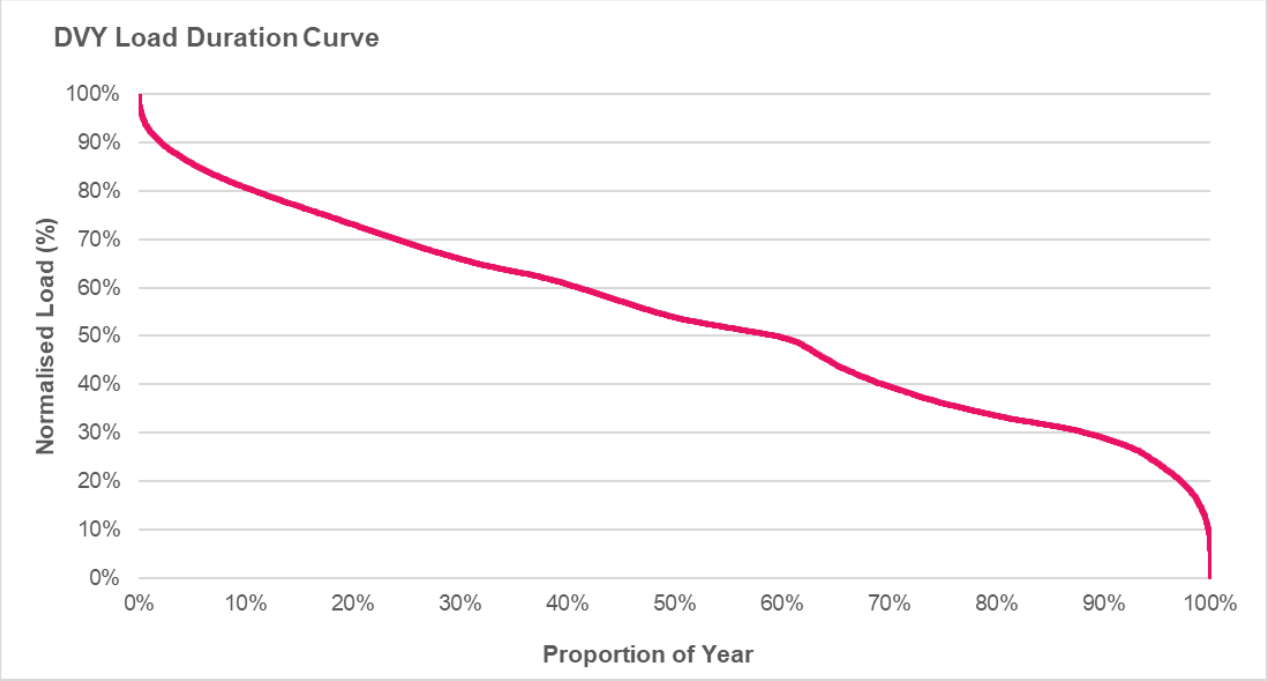

Figure 5: Annual Load-Duration Curve at DVY

The load characteristics can vary marginally from year to year due to changes in weather, solar generation systems growth, and underlying changes in the customers' load usage. Figure 5 shows that load in excess of 80% of the maximum demand lasts for less than 10% of the year. It also shows that DVY normally never operates below 10% of its maximum demand which tends to be in the Christmas-early January industry shutdown period.

6.4 Load Transfer Capacity and Supply Restoration Times

The load transfer capability between DVY and the neighbouring networks of DSH and DN (among others) to be 15.4 MVA for summer 2024/25, noting that most of the load transfer capability is only available from the northern side of the DVY supply area.

Future load transfer capability levels between DVY and the neighbouring network is assumed to remain relatively constant.

Customers' supply is normally restored within 60 minutes following the loss of a major plant item (i.e. a zone substation transformer, or distribution feeder).

6.5 Asset Ratings

The existing capabilities of DVY zone substation for summer and winter are presented in Table 16 for all plant in service (N), and for one transformer out of service (N-1).

Table 16: Summary of DVY Ratings (MVA)

Zone Substation	Summer Cyclic Rating at 40°C		Winter Cyclic Rating at 10°C	
	N	N-1	N	N-1
DVY Import[13]	131.1	87.4	154.7	103.1
DVY Export[14]	-99.0	-66.0	-99.0	-66.0

6.6 Value of Customer Reliability

Location-specific Value of Customer Reliability (VCR) is used to value reliability of supply. The locational VCR for the DVY supply area was derived from the sector VCR estimates provided by the AER, weighted in accordance with the composition of the load, by sector, and escalated by CPI. This is summarised in Table 17.

Table 17: Summary of Location Specific VCR

Zone Substation	VCR ($ per MWh, Real 2024)
DVY	54,550

6.7 Asset Failure Rates

The base (average) reliability and safety consequence data adopted in this assessment is presented in Table 18, Table 19 and Table 20 below. The data is based on observed UE asset failure rates.

Table 18: Summary of Asset Failure Rates and Hazard Function (Weibull Distribution Parameters)

Equipment	α parameter	β parameter
Protection Relays (Failure to Operate)	3.0	36

[13] Power flow towards customer load.
[14] Power flow towards the transmission network.

Table 19: Summary of Asset Reliability Consequence Probability

Equipment	Consequence	Probability
Protection Relays (Reliability)	Bus Outage Feeder Outage	21% 9%

Table 20: Summary of Asset Safety Consequence Probability

Equipment	Consequence	Probability
Protection Relays (Safety)	Injury Death – Public Death – Staff	0.0260% 0.0115% 0.1960%

6.8 Value of Safety Consequence

Values of safety consequence used in this RIT-D are derived from various sources including Safe Work Australia[15] for LTI, and the Department of Prime Minister and Cabinet, Best Practice Regulation Guidance Note[16] for VSL, (adjusted to Real 2024). These values of safety consequence are summarised in Table 21.

Table 21: Summary of Safety Consequence Values

Safety Consequence	Value of Safety Consequence ($'000, Real 2024)
Injury (LTI)	151
Death (VSL)	5,362

6.9 Discount Rates

To compare cash flows of options with different time profiles, it is necessary to use a discount rate to express future costs and benefits in present value terms. The choice of discount rate will impact on the estimated present value of net market benefits and may affect the ranking of alternative options. A real, pre-tax discount rate of 7.0 per cent representing a commercial discount rate, is adopted in this assessment, being the value applied in AEMO's 2023 Inputs Assumptions and Scenarios Report (IASR)[17] for its latest Integrated System Plan (ISP).

[15] Safe Work Australia, The Cost of Work-related Injury and Illness for Australian Employers, Workers and the Community: 2012-13. Available at: https://www.safeworkaustralia.gov.au/system/files/documents/1702/cost-of-work-related-injury-and-disease-2012-13.docx.pdf
[16] Department of the Prime Minister and Cabinet, Australian Government, Best Practice Regulation Guidance Note: Value of statistical life. Available at: https://oia.pmc.gov.au/resources/guidance-assessing-impacts/value-statistical-life
[17] AEMO's 2023 IASR Table 31. Available at: https://aemo.com.au/-/media/files/major-publications/isp/2023/2023-inputs-assumptions-and-scenarios-report.pdf.

7. Credible Options

UE presented eight options (network, non-network and standalone power system) in the Notice of Determination report published on 16th May 2024. Only two network options were regarded as being credible for the reasons set out in that report. Details of the credible options that are assessed in this RIT-D against the base case are presented in Table 22.

Table 22: Credible Options Assessed in this RIT-D

Option	Description
1- Replace the DVY secondary systems (by November 2025)	This option involves a replacement of all the secondary systems at DVY, built to UE's latest design standards. This option addresses both the safety need and reliability need. The total capital cost of this option is $7.60 million (Real, 2024), including labour (45%), contracts (51%) and materials (4%). The present value of all costs (capital, O&M, EUE and safety risk) is $9.01 million (Real, 2024).
2 - Replace the DVY RTU, then the remaining secondary systems two-years later (by November 2027)	This option involves a replacement of the RTU first followed by the remaining secondary systems at DVY two years later, built to UE's latest design standards. This option addresses the majority of the safety need and reliability need. The total capital cost of this option is $9.16 million (Real, 2024), including labour (44%), contracts (53%) and materials (3%). The present value of all costs (capital, O&M, EUE and safety risk) is $10.03 million (Real, 2024).

8. Market Modelling Methodology

The RIT-D requires market benefits identified to be material, to be calculated by comparing the state-of-the-world in the base case (where no action is undertaken by UE), against each of the credible options in place. The states-of-the-world are a range of reasonable and mutually consistent scenarios of credible supply and demand characteristics and conditions that may affect the calculation of the market benefits over the period of assessment. The selection of the preferred option is informed by a weighting of all the reasonable scenarios.

The RIT-D economic analysis has been undertaken over a 15-year period, commensurate with the lifecycle of the secondary asset investments considered in this RIT-D assessment.

Furthermore, a set of sensitivity studies is undertaken on the preferred option by varying key input variables, to test the economic viability and rank of the preferred option against other options and the base case, for all credible changes in assumptions.

8.1 Classes of Market Benefits Considered Material

The purpose of the RIT-D is to identify the credible option that maximises the present value of net market benefits to all those who produce, consume and transport electricity in the National Electricity Market (NEM).

In order to measure the increase in net market benefit, UE has analysed the classes of market benefits required to be considered by the RIT-D.[18] The classes of market benefits that are considered material and have been quantified in this RIT-D assessment are:

- Changes in safety risk costs[19]; and
- Changes in involuntary load shedding.

8.1.1 Changes in Safety Risk Cost

Reducing the likelihood of asset failure by addressing poor condition assets provides a better safety outcome for the supply area, by reducing potential safety incidents and the consequential risk of harm to UE's personnel and the wider community. At DVY, the safety risk cost is considered to be material. The method used by UE in quantifying changes in safety risk cost is described in Section 6.1.1.

8.1.2 Changes in Involuntary Load Shedding

Reducing the likelihood of asset failure by addressing poor condition assets provides a greater reliability for the supply area, by reducing potential supply interruptions and the consequential risk of involuntary load shedding. At DVY, the reliability risk cost (expressed as the value of EUE) is considered to be material. The method used by UE in quantifying changes in involuntary load shedding is described in Section 6.1.2.

8.2 Classes of Market Benefits Not Expected to be Material

UE considers that the following classes of market benefit are not likely to be material for this RIT-D assessment:

- Changes in load transfer capacity and the capacity of embedded generating units to take up load;
- Changes in electrical energy losses;
- Changes in voluntary load curtailment;
- Changes in costs to other parties;
- Difference in timing of expenditure; and
- Additional option value.

[18] NER: clause 5.17.1(c) paragraph 4.

[19] UE notes that use of a safety risk cost as a class of market benefit is consistent with practice notes provided by the AER, and is the approach taken by other network service providers within the NEM. Refer to: "AER – Industry Practice Application Note – Asset Replacement Planning – January 2019". Available at: https://www.aer.gov.au/system/files/D19-2978%20-%20AER%20-Industry%20practice%20application%20note%20Asset%20replacement%20planning%20-%2025%20January%202019.pdf

8.2.1 Changes in Load Transfer Capacity and the Capacity of Embedded Generating Units

The modelling undertaken in Section 8.1.2 considers load transfer that may be expected to occur with each of the credible options in place. Changes in load transfer capability is not expected to be materially different between any of the credible options considered, or with the base case. Furthermore, changes in the capacity of embedded generating units to take up load is not expected to be materially different between any of the credible options considered, or with the base case.

8.2.2 Changes in Electrical Energy Losses

The differences in electrical energy losses between credible options and with the base case is considered to be negligible.

8.2.3 Changes in Voluntary Load Curtailment

Voluntary load curtailment is where customers agree to voluntarily curtail their electricity under certain circumstances, such as during a network asset outage event. The customer will typically receive an agreed payment for making load available for curtailment, and for actually having it curtailed during a network event. A credible demand-side reduction option leads to a change in the amount of voluntary load curtailment.

In its Notice of Determination report, UE assessed the potential for voluntary load curtailment within the DVY supply area. It was identified from that report that the potential for voluntary load curtailment was immaterial to address the identified need. Therefore, this market benefit is not quantified for this RIT-D, as it was considered to be not material to differentiate between credible options, or with the base case.

8.2.4 Changes in Costs to Other Parties

There are no material market benefits (or costs) associated with changes in costs to other parties in this instance.

8.2.5 Difference in Timing of Expenditure

UE has determined that the timing of other unrelated expenditure is not impacted by the options considered in this assessment. Therefore, this market benefit is not quantified, as it was not considered to be relevant to differentiate between options that address the need within the DVY supply area.

8.2.6 Additional Option Value

Additional option value is likely to arise where there is uncertainty regarding future outcomes, the information that is available in the future is likely to change, and if the credible options considered by UE are sufficiently flexible to respond to that change.

In the context of the DVY supply area, it is noted that a key identified need relates to safety. As there is virtually no uncertainty in the condition of the assets further deteriorating over time, and that the current condition of the assets is not tenable under the AFAP principle, there is little value in retaining flexibility.

UE considers that the estimation of any option value benefits captured via the scenario analysis and comparison of the credible option under those scenarios would be adequate to meet the NER requirements to consider option value as a class of market benefit.

UE therefore does not propose to estimate any additional option value market benefit for this RIT-D assessment.

8.3 Costs of Credible Options

UE has estimated the capital costs of the credible options, based on actual costs from previous projects of a similar nature. They have been developed in-house by project estimators. UE estimates that the actual cost is within +/- 20 per cent of the capital cost used within this RIT-D. The capital and operating cost assumptions for each credible option considered in this RIT-D assessment are summarised in Table 23.

Table 23: Capital and Operating Costs of Credible Options ($'000, Real 2024)

Option	Capital Cost	Operational Cost (pa)
Base Case - Do Nothing	0	0
Option 1 - Replace the DVY secondary systems	7,591	(23)
Option 2 - Replace the DVY RTU, then the remaining secondary systems two-years later	9,155	(17)

The 15-year present value of capital, operating and risk costs for each credible option considered in this RIT-D assessment are summarised in Table 24.

Table 24: Present Value of Costs of Credible Options ($'000, Real 2024)

Option	Capital Cost	Operational Cost	Investment Cost (Net)	Risk Cost	Total Cost
Base Case - Do Nothing	0	0	0	15,467	15,467
Option 1 - Replace the DVY secondary systems	7,327	(200)	7,127	1,878	9,005
Option 2 - Replace the DVY RTU, then the remaining secondary systems two-years later	7,864	(161)	7,703	2,331	10,034

8.4 Scenarios

Clause 5.17.1 paragraph (c)(1) of the NER requires the RIT-D to be based on a cost-benefit analysis that considers a number of reasonable state-of-the-world scenarios of future supply and demand.

The development of additional reasonable scenarios applied by UE for this RIT-D involved a process of applying a credible sensitivity on key input variables around a Central Scenario, to identify a credible Low Scenario and a credible High Scenario. A weighting is then assigned to each of the three scenarios, representing the likelihood of each of these state-of-the-world scenarios materialising. The Weighted Scenario is then used to identify the Preferred Option, as it inherently takes into account the uncertainty associated with different future states-of-the-world.

For the identified need in this RIT-D assessment, the major input variables that impact future reliability and safety outcomes within the DVY supply area, are changes in the demand for electricity, and changes in the asset failure rates. Table 25 lists the variables and ranges adopted for the purpose of defining scenarios.

Table 25: Scenario Variables and Weightings

Scenario Definition	Low Scenario	Central Scenario	High Scenario
Weighting	25%	50%	25%
Maximum demand	90%	100%	105%
Asset failure rate	85%	100%	115%

8.5 Sensitivities

In order to test the robustness of the RIT-D preferred option to changes in assumptions, a set of sensitivities to key input variables to the analysis has been applied. Table 26 lists the variables and ranges adopted for the purpose of informing sensitivity analysis.

Table 26: Sensitivity Analysis Variables

Sensitivity Testing	Lower Bound	Base Value	Upper Bound
Maximum demand	90%	100% - Refer Section 6.2.	105%
Capital and operational costs	80%	100% - Refer Section 8.3.	120%
Value of customer reliability	80%	100% - Refer Section 6.6.	120%
Discount rate[20]	3.0%	7.0% - Refer Section 6.9.	10.5%
Asset failure rates	85%	100% - Refer Section 6.7.	115%

9. Results of Analysis

The results of the Net Present Value (NPV) cost-benefit analysis for each of the credible options considered in this RIT-D assessment, for each scenario are detailed below.

9.1 Gross Market Benefits

The gross market benefit is the sum of each of the individual categories of material market benefit, as quantified on the basis of the approach set out in Section 8.1, expressed in present value terms over the 15-year analysis period.

Table 27 and Table 28 summarises the present value of gross market benefits of Option 1 and Option 2 respectively.

Table 27: Gross Market Benefits Option 1 - Replace the DVY secondary systems

Option 1 Scenario	Present Value ('000, Real 2024)		
	Avoided EUE Risk	Avoided Safety Risk	Gross Market Benefit
Weighted	10,535	2,980	13,516
Central	10,608	2,980	13,589
Low	8,115	2,533	10,649
High	12,810	3,427	16,237

Table 28: Gross Market Benefits Option 2 - Replace DVY RTU, then remaining secondary systems two-years later

Option 2 Scenario	Present Value ('000, Real 2024)		
	Avoided EUE Risk	Avoided Safety Risk	Gross Market Benefit
Weighted	10,279	2,786	13,065
Central	10,350	2,786	13,136
Low	7,918	2,368	10,286
High	12,497	3,204	15,701

The gross market benefits of Option 2 are marginally lower than Option 1, predominantly due to the later optimum timing of Option 2, delaying the realisation of benefits. Refer Section 9.4 for more information on the timing of each option.

Figure 6 shows the breakdown of gross market benefits for Option 1 and Option 2 for each year over the 15-year analysis period under the Central Scenario, assuming an implementation completion date from 2025/26.

[20] Based on AEMO's 2023 IASR, Table 31.

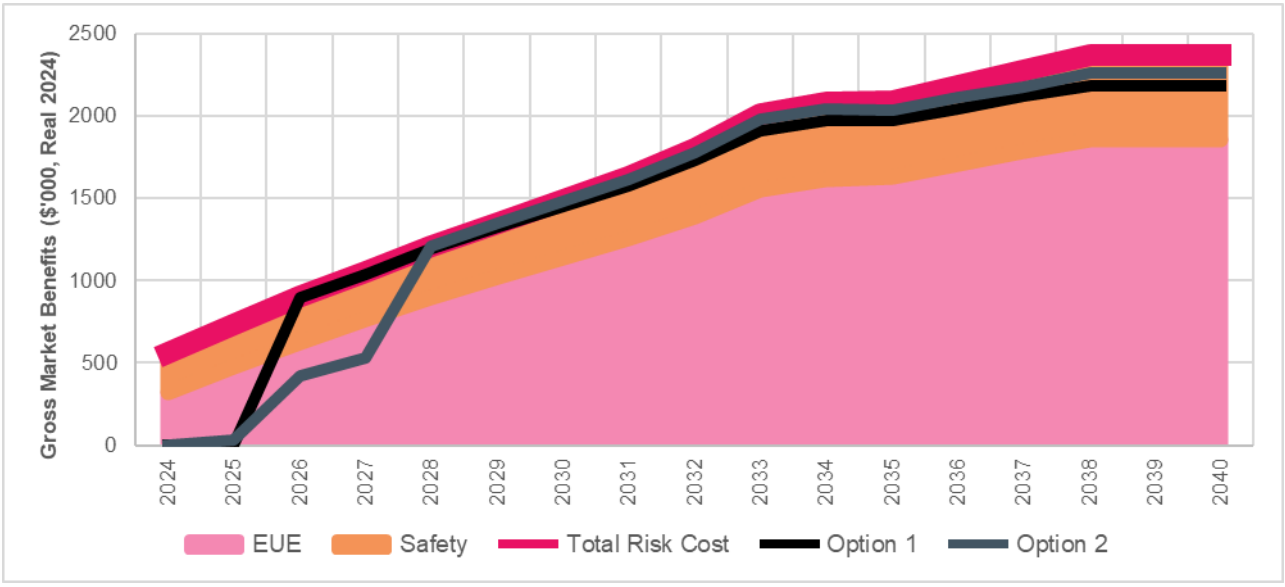

Figure 6: Gross Market Benefits: Central Scenario ($'000, Real 2024)

9.2 Net Market Benefits

Table 29 summarises the net market benefit in present value terms for each credible option over a 15-year analysis period, relative to the base case (Do Nothing). The net market benefit for Option 1 and Option 2 is the present value of gross market benefits, under the Weighted Scenario (as set out in Table 27 and Table 28 respectively), minus the present value of total investment costs of each option (as set out in Table 24).

The table also shows the corresponding ranking of each option under the RIT-D, with options ranked in the order of descending net market benefit.

Table 29: Net Market Benefits of Credible Options for the Weighted Scenario

Options	Present Value ('000, Real 2024)			
	Investment Cost	Gross Market Benefits	Net Market Benefits	Ranking Under RIT-D
Do Nothing	0	0	0	3
Option 1	7,127	13,516	6,389	1
Option 2	7,703	13,065	5,362	2

This RIT-D assessment demonstrates that Option 1 has the highest net market benefit under the Weighted Scenario.

9.3 Sensitivity Assessment

UE has tested the robustness of the RIT-D assessment to the inclusion of a number of sensitivity tests around the input assumptions adopted. These sensitivities were presented in Table 26. Table 30 shows the results of these sensitivity studies.

Table 30: Present Net Market Benefits of Credible Options - Sensitivities ($'000, Real 2024)

Sensitivity for Central Scenario	Option 1	Option 2
All Variables: Base value	6,462	5,433
Maximum demand: Lower bound	5,401	4,398
Maximum demand: Upper bound	6,992	5,950
Capital and operational costs: Lower bound	7,927	7,006
Capital and operational costs: Upper bound	4,996	3,860
Value of customer reliability: Lower bound	4,340	3,363
Value of customer reliability: Upper bound	8,583	7,503
Discount rate: Lower bound	12,106	10,589
Discount rate: Upper bound	3,247	2,616
Asset failure rates: Lower bound	4,423	3,463
Asset failure rates: Upper bound	8,500	7,403

Option 1 has a present value of net market benefit that remains positive under all credible sensitivities, and when compared with Option 2, clearly maintains its status as the preferred option under all credible sensitivities.

Table 31 presents the net market benefits in NPV terms for each option across all reasonable scenarios considered.

Table 31: Present Value of Net Market Benefits of Credible Options - Scenarios ($'000, Real 2024)

Scenario	Do Nothing		Option 1		Option 2	
	Net Market Benefit	Ranking	Net Market Benefit	Ranking	Net Market Benefit	Ranking
Weighted	0	3	6,389	1	5,362	2
Central	0	3	6,462	1	5,433	2
Low	0	3	3,522	1	2,583	2
High	0	3	9,110	1	7,998	2

For all reasonable scenarios considered, Option 1 maximises the present value of net market benefits for all scenarios, including under the Weighted Scenario (i.e. a weighting of the Central, Low and High Scenarios).

Under the RIT-D, the preferred option should maximise the present value of the net market benefits to all those who produce, consume and transport electricity in the NEM when compared to other credible options and the base case. This RIT-D assessment, based on the sensitivity results in Table 30 and the scenario results in Table 31, demonstrates that Option 1 maximises the present value of net market benefits under all reasonable sensitivities and scenarios considered.

The preferred option for investment for the DVY supply area is therefore Option 1 Replace the DVY secondary systems (by November 2025). This option satisfies the requirements of the RIT-D.

9.4 Economic Timing

The previous Sections 9.2 and 9.3 demonstrate Option 1 to be the preferred option to address the identified need. Although the choice of the preferred option is clear, the timing of this investment is not, given a number of reasonable scenarios are investigated. The economic timing of the preferred option is when the annualised value of EUE and safety risk cost (i.e. the annualised cost of the total risk) exceeds the annualised cost of the preferred option (i.e. the annualised investment cost). Table 32 shows the expected timing of the preferred option under each reasonable scenario.

Table 32: Expected Timing of the Preferred Option

Scenario	Annualised cost of total risk minus investment costs ('000, Real 2024)				Optimum Timing Before Summer[21]
	2025	2026	2027	2028	
Weighted	199	368	516	674	2025/26
Central	201	371	520	679	2025/26
Low	16	140	249	365	2025/26
High	376	589	776	974	2025/26

Under the Weighted Scenario, the optimum timing of Option 1 is prior to summer 2025/26 (i.e. November 2025).

10. Preferred Option

Section 9 has presented the results of the NPV analysis conducted for this RIT-D assessment. This RIT-D assessment has demonstrated that Option 1 maximises the present value of net market benefits under all reasonable sensitivities and scenarios considered.

The preferred option for investment is therefore Option 1. This option involves a replacement of all the secondary systems at DVY, built to UE's latest design standards. This option addresses both the safety need and reliability need and maximises the present value of the net economic benefit to all those who produce, consume and transport electricity in the NEM, considering a set of reasonable state-of-the-world scenarios and their weightings.

The preferred option was tested under a range of sensitivities. In each case, Option 1 was confirmed to provide positive economic benefits in all sensitivities, and is the highest-ranked option in all sensitivities.

The optimum timing for commissioning of the preferred option is no later than November 2025.

The preferred option has a capital cost of $7.6 million (Real, 2024).

11. Next Steps

This FPAR represents the final stage of the RIT-D process.

In accordance with the provisions set out in clause 5.17.5, paragraph (c) of the NER, Registered Participants or interested parties may, within 30 days after the publication of this report, dispute the conclusions made by UE in this report with the Australian Energy Regulator (AER).

Accordingly, Registered Participants and interested parties who wish to dispute the recommendation outlined in this report must do so by 5th July 2024. Any parties raising such a dispute are also required to notify United Energy at planning@ue.com.au. If no formal dispute is raised, UE will commence with the investment activities necessary to proceed with the implementation of the preferred option.

[21]The economic analysis concludes the optimum timing is 2024/25 however the preferred option cannot be constructed within this timeframe. Instead it can be constructed before the 2025/26 summer.

12. Checklist of Compliance with NER Clauses

This Section 12 sets out a compliance checklist which demonstrates the compliance of this FPAR with the requirements of clause 5.17.4, paragraph (r) of the NER in Table 33.

Table 33: NER Requirements Checklist

NER Clause	Summary of Requirements	Relevant Section FPAR
5.17.4(j)(1)	A description of the identified need for investment	Section 5.2
5.17.4(j)(2)	The assumptions used in identifying the need (including, in the case of proposed reliability corrective action, why the RIT-D proponent considers reliability corrective action is necessary)	Section 6
5.17.4(j)(3)	Summary of, and commentary on, the submissions on the options screening report	Not Applicable
5.17.4(j)(4)	A description of each credible option assessed	Section 7
5.17.4(j)(5)	A quantification of each applicable market benefit for each credible option	Section 9.1
5.17.4(j)(6)	A quantification of each applicable cost for each credible option, including breakdown of operating and capital expenditure	Section 8.3
5.17.4(j)(7)	A detailed description of methodologies used in quantifying each class of market benefit	Section 8.1
5.17.4(j)(8)	Where relevant, the reasons why UE has determined that a class or classes of market benefits do not apply to a credible option	Section 8.2
5.17.4(j)(9)	The results of a net present value analysis for each option and accompanying explanatory statements regarding the results	Section 9.2 Section 9.3
5.17.4(j)(10)	The identification of the proposed preferred option	Section 10
5.17.4(j)(11)	Details of the proposed preferred option	Section 10
5.17.4(j)(12)	Contact details of suitable staff at UE	Section 11
5.17.4(r)(1)(ii)	Summary of, and commentary on, the submissions on the Draft Project Assessment Report	Not Applicable

Appendix A: Secondary Assets Photos

A significant proportion of the protection, control, communications and auxiliary supply systems within the DVY control building (shown in Figure 7) are in a poor condition and technically obsolete (with no vendor support and limited spares). UE has assessed there is now an unacceptable risk of asset failure, with significant consequences for safety, and for the reliability of electricity supply to UE's customers within the DVY supply area.



Figure 7: In-Service Protection, Control & Communications Equipment at DVY